R1D415

Earth leakage relay with 1 operatin threshould, flush-mount. External CT, 110VAC/DC-240VAC-415VAC



Product designation			Earth leakage relays
Product type designation			R1D
General characteristics			
Description			Flush mount with transparent cover, 1 operating threshold
Control circut			
Toroidal transformer			External
Adjustments			
	Tripping set-point (IΔn)		
	(x0.1)	A	0.025...0.25
	(x1)	A	0.25...2.5
	(x10)	A	2.5...25
	(external multiplier)	A	25...250
	Tripping delay time		
	(tx1)	s	0.02...0.5
	(tx10)	s	0.2...5
Selection of multiplier for IΔn and t			By dip switches
Resetting			Configurable automatic or manual by button on front
Test Button			Yes
Shunt circuit control			No
Auxiliary supply			
Auxiliary rated supply voltage Us			110… 125VAC/DC;220… 240/380… 415VAC
Operational limits			110… 125VAC/DC or 220…240VAC or 380…415VAC
Output contacts			1
Rated frequency		Hz	50...60
Power consumption Max		VA	5.5
Relay outputs			
Relay state			Normally de-energised
Contact arrangement			1 changeover SPDT (trip)
Rated contact capacity IEC Ith			5A - 250VAC
Insulations			
Power frequency withstand voltage		kV	2.5kV for 60s

The characteristics described in this document are subject to updates or modifications at any time. The descriptions, technical and functional information, illustrations and instructions in this brochure are purely illustrative, and are consequently not contractually binding

R1D415

Earth leakage relay with 1 operatin threshould, flush-mount. External CT, 110VAC/DC-240VAC-415VAC

Indications				
Auxiliary voltage available (ON)				Green LED
Relay tripping (TRIP)				Red LED
Connections				
Terminals type				Fixed
Tightening torque for terminals				
		max	Nm	0.5
		max	lbin	4.5
Conductor section				
	AWG/Kcmil			
		min		24
		max		12
	IEC			
		min	mm²	0.2
		max	mm²	2.5
Operations				
Mechanical life			cycles	50000000
Electrical life			cycles	300000
Ambient conditions				
Temperature				
	Operating temperature			
		min	°C	-10
		max	°C	+60
	Storage temperature			
		min	°C	-20
		max	°C	+80
Relative humidity			%	≤90%
Housing				
Material				Self-extinguishing polycarbonate
Mounting				Flush mount
Degree of protection				IP40 with protecting cover, IP20 terminals
Dimensions (W x H x D)			mm	96x96x75
Weight			g	280

Dimensions

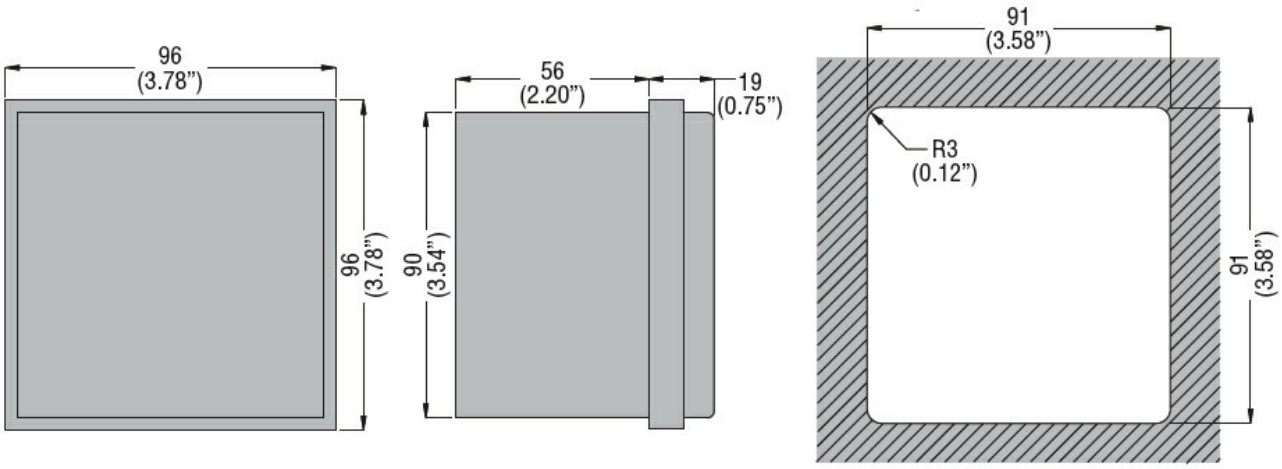

Wiring diagrams

The characteristics described in this document are subject to updates or modifications at any time. The descriptions, technical and functional information, illustrations and instructions in this brochure are purely illustrative, and are consequently not contractually binding

R1D415

Earth leakage relay with 1 operatin threshould, flush-mount. External CT, 110VAC/DC-240VAC-415VAC

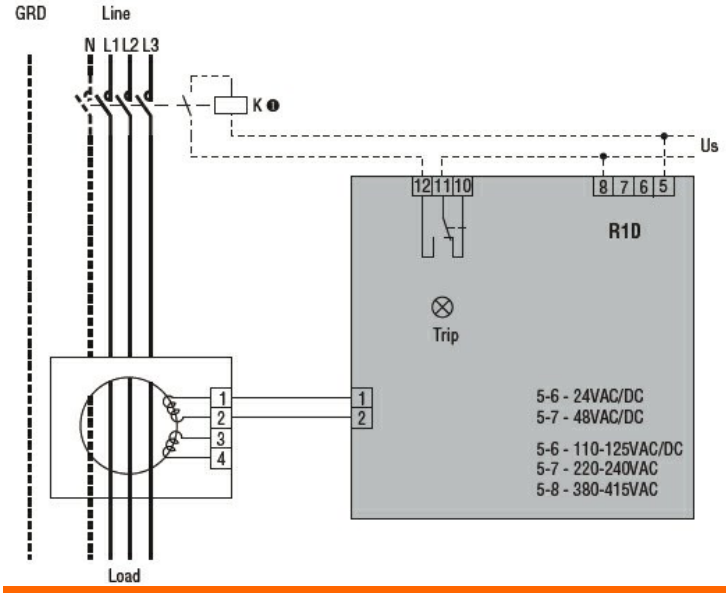

Certifications and compliance

Compliant with standards

IEC/EN 60947-2

Certificates

EAC

ETIM classification

ETIM 8.0

EC001445 - Residual current monitoring relay

The characteristics described in this document are subject to updates or modifications at any time. The descriptions, technical and functional information, illustrations and instructions in this brochure are purely illustrative, and are consequently not contractually binding