Part Number:	**BU-60HS-* /BU-60CHS-***
Description:	**Alligator Clip with Acetate Handle and Screw**
3507	

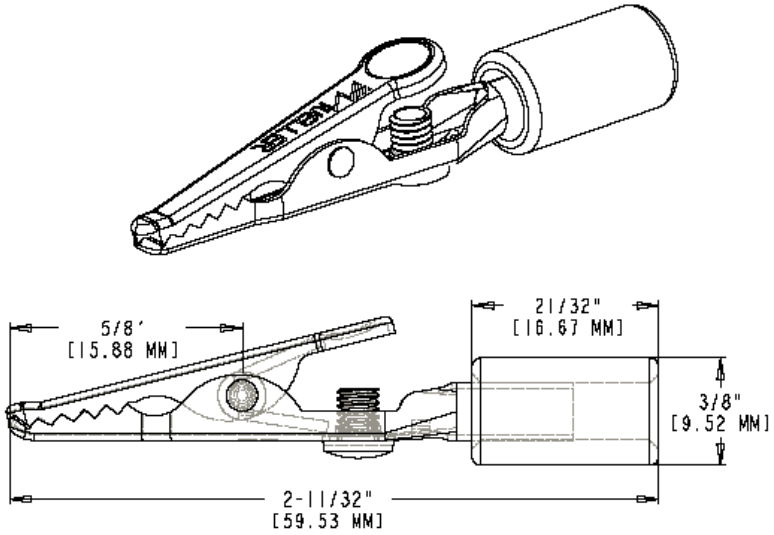

- Alligator Clip with Acetate Handle and Screw
- Compatible with all shrouded, unshrouded, or retractable 0.16” (4 mm) Banana plugs
- Jaw opens 0.31” (7.9 mm) max
- Material: nickel-plated steel (BU-60HS-*) or solid copper (BU-60CHS-*) clip; tenite acetate insulator handle
- Length: 2.34” (59.53 mm)
- *Std.Colors: -0 Black, -2 Red, -4 Yellow, -5 Green, -6 Blue, -9 White
- Federal Spec: AA59466-003 (red), AA59466-016 (black), (BU-60CHS-*)
- Rating: 10 Amps
- RoHS Compliant

Mueller Electric Company
1625 E. 31st Street
Cleveland, Ohio 44114

ISO 9001:2000
Over 95 Years Of Innovation
www.muellerelectric.com

TEL. 800-955-2629
TEL. 216-771-5225
FAX. 216-771-3068