Product data sheet

Specifications



Latching emergency stop rope pull switch, Telemecanique Emergency stop rope pull switches XY2C, e XY2CH, 2NC+1 NO, pilot light 24 V, booted pushbutton

XY2CH13293

Main

Range of product	Telemecanique Emergency stop rope pull switches XY2C
Product or component type	Latching emergency stop rope pull switch
Device short name	XY2CH
Housing colour	Red RAL 3000
Overvoltage category	Class I conforming to EN/IEC 61140 Class I conforming to NF C 20-030

Complementary

Local signalling	With pilot light, yellow, 24 V
Number of cables	1
Trigger cable maximum length	30 m
Body material	Zamak
Cover material	Stainless steel
Reset	By booted push-button
[Us] rated supply voltage	24 V AC/DC
Contacts type and composition	2 NC + 1 NO
Contact operation	Slow-break
Trigger cable anchor point	RH or LH side
Light block supply	Direct
Connections - terminals	Screw clamp terminal, 1 x 0.34...1 x 1 mm² Screw clamp terminal, 1 x 0.34...2 x 0.75 mm²
Tightening torque	0.8…1.2 N.m
Cable entry number	3 tapped entry for Pg 13.5 cable gland
Safety level	Can reach PL = e with the appropriate monitoring system and correctly wired conforming to EN/ISO 13849-1 Can reach category 4 with the appropriate monitoring system and correctly wired conforming to EN/ISO 13849-1 Can reach SIL 3 with the appropriate monitoring system and correctly wired conforming to EN/IEC 61508
Safety reliability data	B10d = 4000000 conforming to IEC 60947-5-5 value given for a life time of 20 years limited by mechanical or contact wear
Marking	CE
Mechanical durability	800000 cycles

Disclaimer: This documentation is not intended as a substitute for and is not to be used for determining suitability or reliability of these products for specific user applications

Distance between cable supports	5 m
[Ie] rated operational current	0.1 A at 250 V, DC-13, R300 conforming to EN/IEC 60947-5-1 appendix A 1.5 A at 240 V, AC-15, B300 conforming to EN/IEC 60947-5-1 appendix A
[Ithe] conventional enclosed thermal current	6 A
[Ui] rated insulation voltage	400 V (pollution degree 3) conforming to EN/IEC 60947-1 300 V conforming to UL 508
[Uimp] rated impulse withstand voltage	4 kV conforming to EN/IEC 60947-1
Positive opening	With conforming to EN/IEC 60947-5-1
Maximum resistance across terminals	25 MOhm conforming to EN/IEC 60255-7 category 3 25 MOhm conforming to NF C 93-050 method A
Short-circuit protection	6 A cartridge fuse type gG conforming to EN/IEC 60269
Terminals description ISO n°1	(13-14)NO (21-22)NC (31-32)NC
Net weight	0.865 kg
Compatibility code	XY2CH

Environment

Standards	EN/IEC 60947-5-1 Work equipment directive 2009/104/EC EN/IEC 60947-5-5 Machinery directive 2006/42/EC EN/ISO 13850 EN/IEC 60204-1
Product certifications	UL category NISD emergency stop devices
Protective treatment	TC
Ambient air temperature for operation	-25…70 °C
Ambient air temperature for storage	-40…70 °C
Vibration resistance	10 gn (f= 10…150 Hz) conforming to EN/IEC 60068-2-6
Shock resistance	50 gn 11 ms conforming to EN/IEC 60068-2-27
IP degree of protection	IP65 conforming to IEC 60529

Packing Units

Unit Type of Package 1	PCE
Number of Units in Package 1	1
Package 1 Weight	1.043 kg
Package 1 Height	9.2 cm
Package 1 width	8 cm
Package 1 Length	19.5 cm
Unit Type of Package 2	S03
Number of Units in Package 2	10
Package 2 Weight	10.966 kg
Package 2 Height	30 cm
Package 2 width	30 cm
Package 2 Length	40 cm
Package 3 Height	80 cm

Offer Sustainability

Sustainable offer status	Green Premium product
REACh Regulation	REACh Declaration
EU RoHS Directive	Pro-active compliance (Product out of EU RoHS legal scope) EU RoHS Declaration
Mercury free	Yes
RoHS exemption information	Yes
Environmental Disclosure	Product Environmental Profile
California proposition 65	WARNING: This product can expose you to chemicals including: Diisononyl phthalate (DINP), which is known to the State of California to cause cancer, and Di-isodecyl phthalate (DIDP), which is known to the State of California to cause birth defects or other reproductive harm. For more information go to www.P65Warnings.ca.gov

Contractual warranty

Warranty	18 months

Product data sheet XY2CH13293

Dimensions Drawings

Dimensions

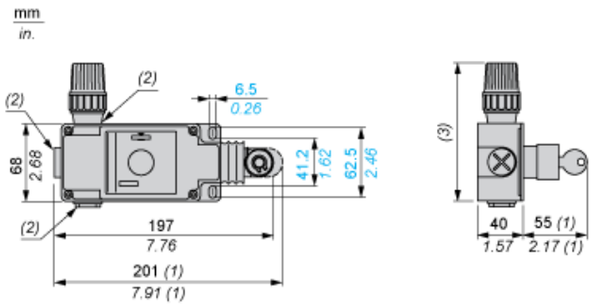

(1) Maximum extension.
(2) Tapped entry for n° 13 (Pg 13.5) cable entry
(3) 121 mm/4.76 in.: 24 V and 48 V versions. 131 mm/5.16 in.: 130 V and 230 V versions.

Electrical Curves

AC Supply 50/60 Hz Inductive Circuit

3-pole Contact Block

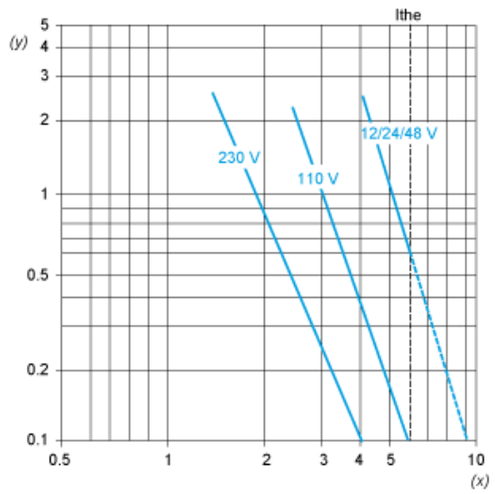

Y Millions of operating cycles
X Current in A

DC Supply Power Broken in for 1 Million Operating Cycles Inductive Circuit

Voltage	V	24	48	120
⎓	W	4	3	2