Brand of NTN corporation

Technical data

EXPAE206

Bearing units



Grey cast housing, radial insert ball bearing with eccentric locking collar, seal with slinger

KIT CONTENT

EX206G2, PAE206

VISUAL (S)

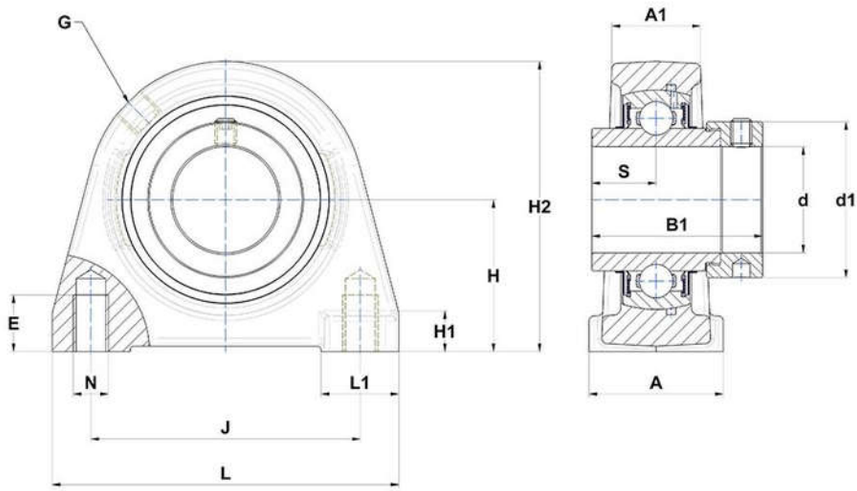

PRODUCT DEFINITION

Brand	SNR
A - Housing width	38 mm
A1 - Housing top width	25 mm
B - Width of Inner Ring	36,4 mm
d - Shaft diameter	30 mm
d1 - Outer dia of eccent. Lock. collar / nut of adapter sleeve	44,1 mm

EXPAE206
Bearing units

PRODUCT DEFINITION	
E - Mounting hole thread depth	12,5 mm
G - Grease fitting	R1/8"
H - Distance mounting base to centerline spheric. seating diam.	42,9 mm
H1 - Housing foot height	11 mm
H2 - Housing height	82 mm
J - Mounting holes distance	76,2 mm
L - Housing length	98 mm
L1 - Housing foot length	22 mm
N - Mounting hole dimension	M10
S - Distance front side/bearing centre	18,2 mm

PRODUCT PERFORMANCE	
C - Dynamic load rating	19500000 mN
C0 - Static load rating	11200000 mN
Operating temperature min.	253,15 °K
Operating temperature max.	373,15 °K

OTHER FEATURES	
Mass	1,04 kg
Recommended tightening torque for set screw	11.5 N-m