Modular Signal Towers / KombiSIGN 72

TwinLIGHT Classic 24VAC/DC BU



Part No.:	**647.510.75**
Series:	**KombiSIGN 72**

MECHANICAL DATA	
Height	66 mm
Diameter	70 mm
Materials	PC
Dome colour	Blue
Protection category	IP65
Service life optical	50,000 h maximum
Working temperature minimum	-30°C
Working temperature maximum	+60°C
UL Type Rating	Type 12
Weight with packaging	91 g
Product weight	77 g

ELECTRICAL DATA	
Operating voltage	24V
Operating voltage type	AC/DC
Operating voltage type	50Hz
Operating voltage tolerance	+/- 10%
Rated operational voltage	24 VDC
Rated operational current	80 mA
Rated inrush current	500 mA
Protection class	Protection class 2
Pollution degree	3

OPTICAL DATA	
Light source	LED
Light colour	Blue
Optical signal image	Blink Permanent TwinLight
Blink frequency (Hz)	1 Hz

! For additional installation and mounting information, refer to the appropriate user guide at www.werma.com. This printed copy is for information only and is subject to alteration.

Modular Signal Towers / KombiSIGN 72

TwinLIGHT Classic 24VAC/DC BU

DRAWING

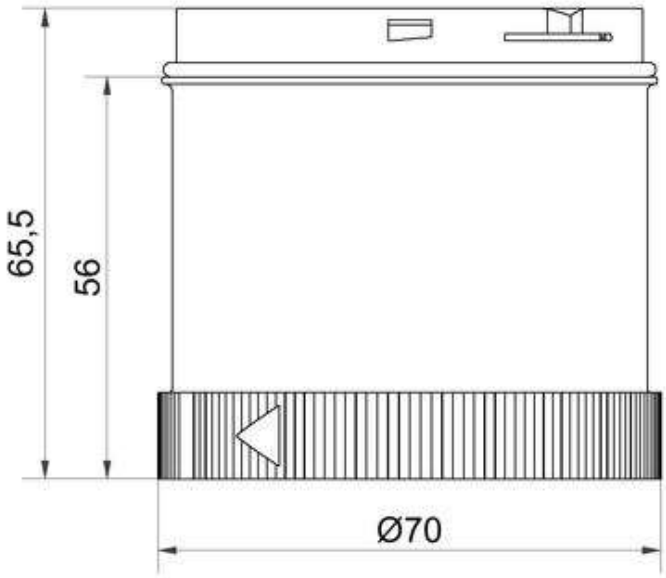

! For additional installation and mounting information, refer to the appropriate user guide at www.werma.com. This printed copy is for information only and is subject to alteration.

310.640.001
931064000101_AL

WERMA

640,641,643
644,645,647

EN 60947-5-1

640/647

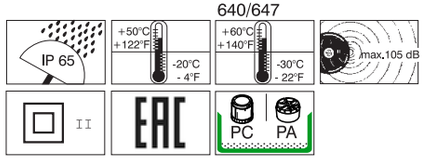

Ⓓ Teilweise, siehe Produktkennzeichnung.
ⒼⒷ Partially, check the product label.
Ⓕ Partiellement, vérifiez sur étiquette du produit.

KombiSIGN 71/72

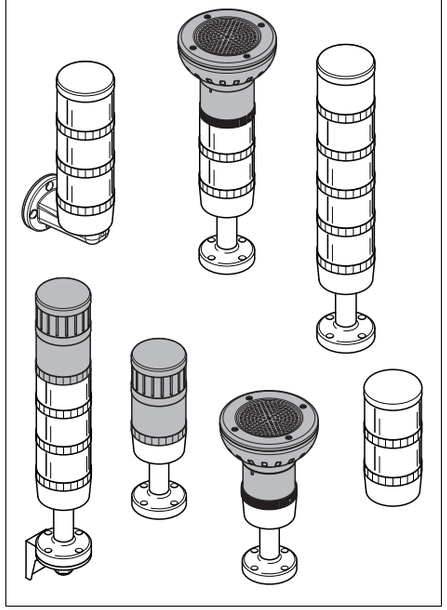

DANGER




Ⓓ Anschluss **ausschließlich** durch ausgebildete Elektro-Fachkräfte.
ⒼⒷ Electrical connection is to be made by trained electrical specialists **only**.
Ⓕ Le branchement doit **uniquement** être effectué par des professionnels.
Ⓘ Il collegamento deve essere eseguito **solo** da elettricisti specializzati.
Ⓔ La conexión **sólo** debe ser realizada por electricistas debidamente formados.
ⓅⓉ A ligação deve ser feita **exclusivamente** por profissional elétrico especializado.
ⓃⓁ De aansluiting mag **enkel** gebeuren door erkende vakmensen.
ⓒⓏ Připojení smí **provádět** pouze kvalifikovaný personál.
ⓅⓁ Podłączenie **wyłącznie** przez specjalistów-elektryków.
ⒻⒾ Liittäminen kuuluu **ainoastaan** koulutettujen sähköalan ammattilaisten tehtäviin.
ⓇⓊⓈ Подключение проводится только специалистом-электриком.
ⓉⓇ Bağlantı **sadece** eğitimli elektrik teknisyenleri tarafından yapılmalıdır.
ⒸⓃ 布线需由专业电工执行

DANGER EVS

644 x40 55
647 x20 55
647 x40 55

Ⓓ Bei Epilepsie ungeeignet!
ⒼⒷ Unsuitable for epilepsy sufferers.
Ⓕ Ne convient pas aux personnes souffrant d'épilepsie.
Ⓘ Inadatto per epilettici.
Ⓔ Inadecuado para epilépticos.
ⓅⓉ Não aconselhavel a pessoas que sofram de Epilepsia.
ⓃⓁ Niet geschikt voor epileptici.
ⒸⓏ Nevhodné pro epileptiky.
ⓅⓁ Nie stosować przy zchorzeniu padaczki.
ⒻⒾ Ei sovellu epileptikoille.
ⓇⓊⓈ Не подходит для страдающих эпилепсией.
ⓉⓇ Epilepsi hastaliği olanlarin kullanmamasi önerilir.
ⒸⓃ 不适用于癫痫病患者

© Ⓓ

WERMA

WERMA Signaltechnik GmbH + Co. KG
D-78604 Rietheim-Weilheim
Telefon +49 (0)7424 / 9557-0
Telefax +49 (0)7424 / 9557-44
info@werma.com
www.werma.com

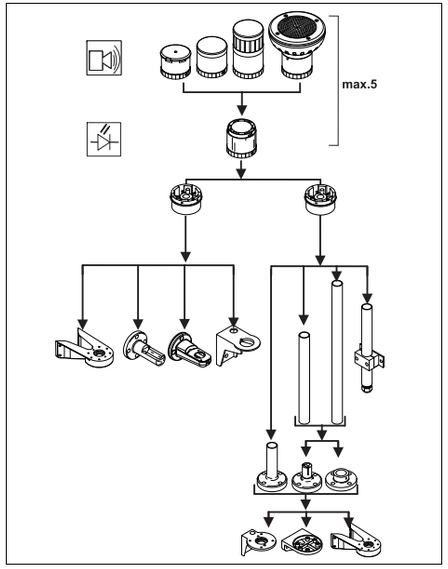

Terminal element	640 xx0 00 640 812 01	12-230 V≃ 12-230 V≃	
TwinLIGHT	647 x10 75 647 x30 75	24 V≃ 24 V≃	< 80 mA < 80 mA
TwinFLASH	647 x20 55 647 x40 55	24 V⎓ 24 V⎓	< 80 mA < 80 mA
Multicolour	644 450 55	24 V⎓	< 120 mA
LED Permanent	644 x00 75 644 x00 67 644 x00 68	24 V≃ 115 V~ 230 V~	< 35 mA < 25 mA < 35 mA
LED Blinking	644 x10 75 644 x10 67 644 x10 68	24 V≃ 115 V~ 230 V~	< 30 mA < 25 mA < 35 mA
LED Flash	644 x20 55	24 V⎓	< 35 mA
LED Rotating	644 x30 75	24 V≃	< 40 mA
LED Ultrabright	644 x80 55	24 V⎓	< 190 mA
LED-EVS	644 x40 55	24 V⎓	< 350 mA
Xenon Flash (2Ws)	643 x00 54 643 x00 55 643 x00 67 643 x00 68 643 x10 55	12 V⎓ 24 V⎓ 115 V~ 230 V~ 24 V⎓	195 mA 125 mA 22 mA 15 mA < 125 mA
Permanent	641 x00 00	12-230 V≃	
BA 15 d	956 x00 75 956 x00 67 956 x00 68	24 V≃ 115 V~ 230 V~	< 45 mA < 15 mA < 15 mA

BA 15 d, < 42 mm	955 840 34 955 840 35 955 840 38 955 840 57	12 V 24 V 230 V 115 V	5W 5W 5W 5W
95 - 105dB	645 870 75 645 870 67 645 870 68 645 102 75	24 V≃ 115 V~ 230 V~ 24 V≃	< 40mA < 60mA < 60mA < 40mA
< 85 dB	645 800 75 645 800 77 645 800 68	24 V≃ 115 V~ 230 V~	< 25 mA < 35 mA < 35 mA
< 102 dB	645 x90 75 645 890 60	24 V≃ 115-230 V~	< 30 mA < 45 mA
< 100 dB	645 850 55	24 V⎓	< 80 mA
80 - 100 dB	645 810 55	24 V⎓	< 150 mA
< 88 dB	645 840 55	24 V⎓	< 400 mA
< 102 dB	645 860 55	24 V⎓	< 400 mA
< 105 dB	645 830 55	24 V⎓	< 100 mA

1

1a: 640 x00 00, 640 820 00
1b: 640 x00 00, 640 820 00 + 975 840 85, 960 000 52, 975 840 86
1c: 640 x10 00, 640 812 01, 640 830 00 + 975 840 10, 960 000 51, 975 840 90, 960 000 50, 975 840 91, ...
1d: 640 x00 00, 640 820 00 + 960 000 02, 960 000 53, 960 000 01, 960 000 54
1e: 940 000 41

1a

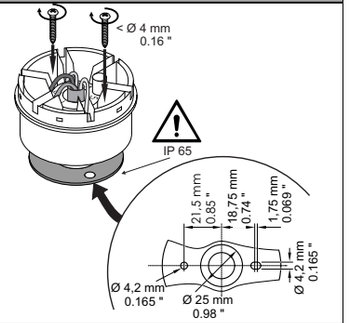

1b

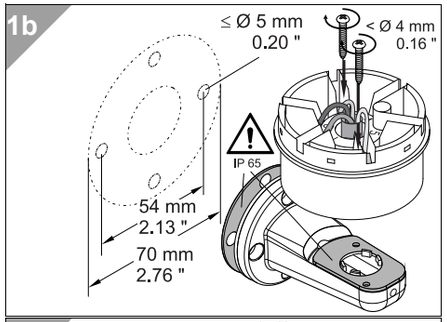

1c

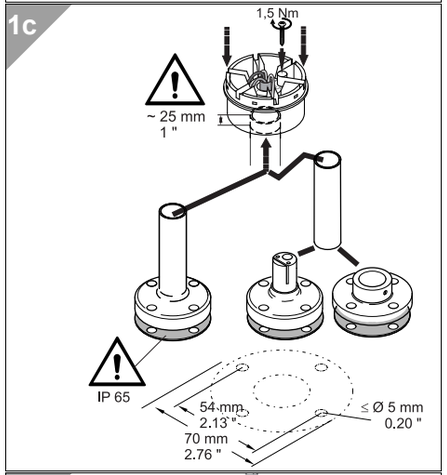

1d

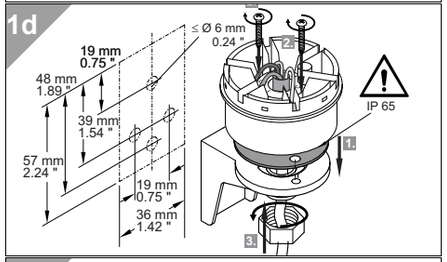

1e

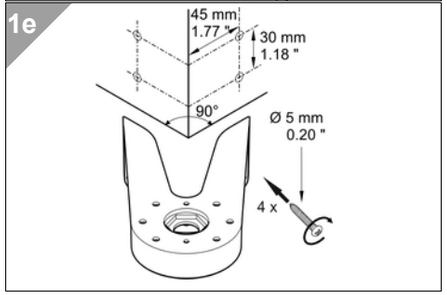

2

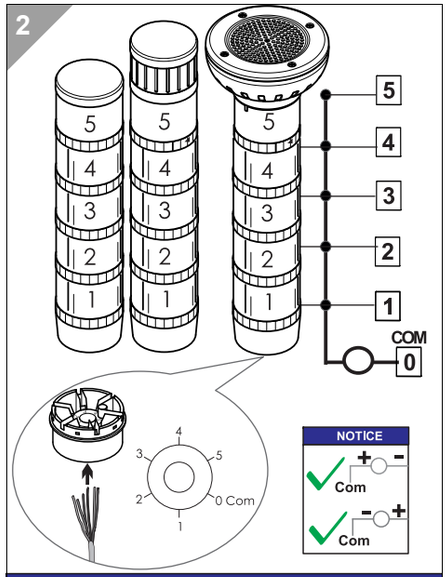

NOTICE
Multicolour 644 450 55

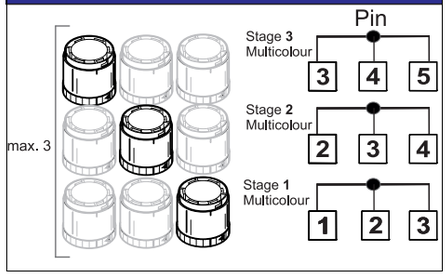

Colour (**RD**)	**24V**		
Colour (**GN**)		**24V**	
Colour (**YE**)	**24V**	**24V**	
Colour (**BU**)			**24V**
Colour (**WH**)	**24V**	**24V**	**24V**
Colour (**TQ**)		**24V**	**24V**
Colour (**VT**)	**24V**		**24V**

3

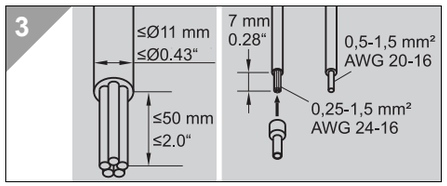

4

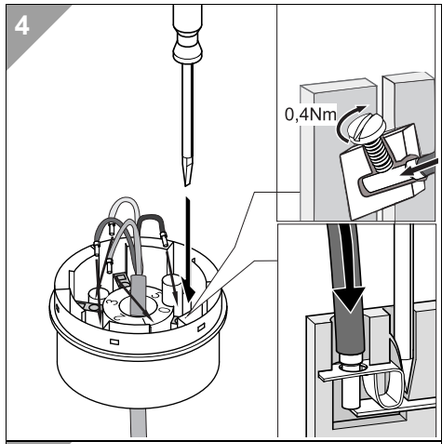

5

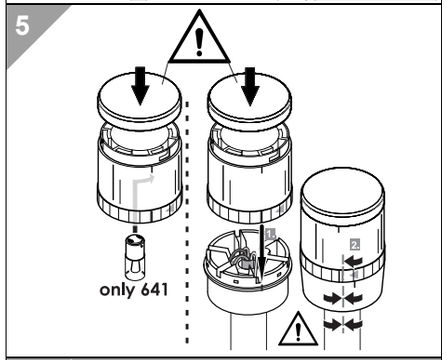

6a

647 x10 75
647 x30 75

* = Default setting

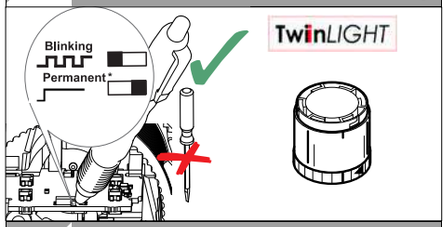

6b

647 x20 55
647 x40 55

* = Default setting

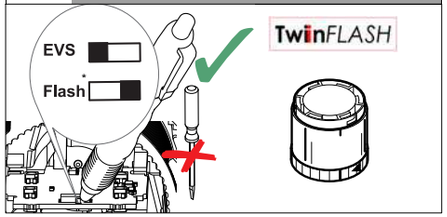

7

WARNING

max. 85-105dB

NOTICE

dB = dB A (SPL) 1m

7a

645 870 xx
645 102 75

* = Default setting

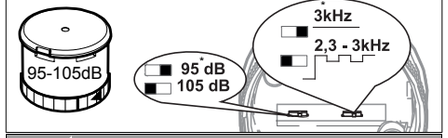

7b

645 800 xx

* = Default setting

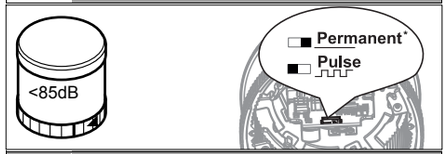

7c

645 x90 xx

* = Default setting

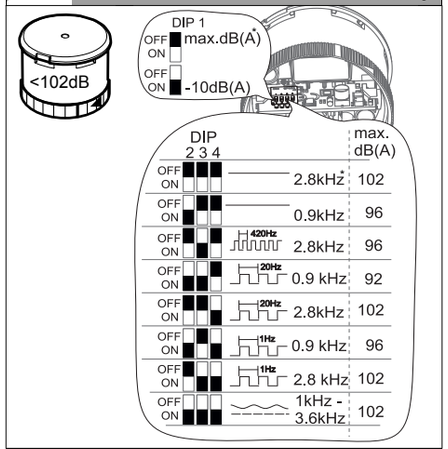

7d

645 810 55

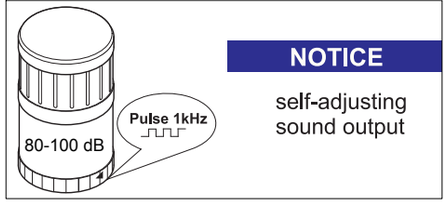

NOTICE

self-adjusting sound output

7e

645 850 55

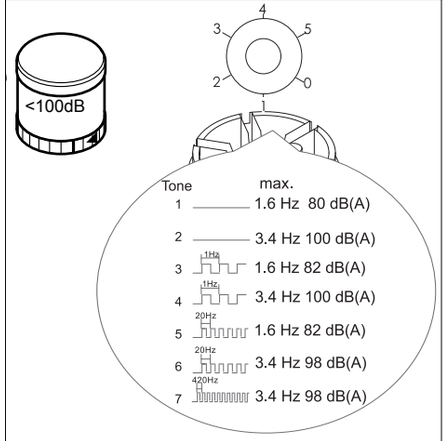

		Pin terminal element				
	Tone	1	2	3	4	5
	1	+24V	+24V	NC		
	2	+24V	+24V	+24V		
	3	+24V	NC	NC		
	4	+24V	NC	+24V		
	5	NC	+24V	NC		
	6	NC	+24V	+24V		
	7	NC	NC	+24V		
	1		+24V	+24V	NC	
	2		+24V	+24V	+24V	
	3		+24V	NC	NC	
	4		+24V	NC	+24V	
	5		NC	+24V	NC	
	6		NC	+24V	+24V	
	7		NC	NC	+24V	
	1			+24V	+24V	NC
	2			+24V	+24V	+24V
	3			+24V	NC	NC
	4			+24V	NC	+24V
	5			NC	+24V	NC
	6			NC	+24V	+24V
	7			NC	NC	+24V
	1				+24V	+24V
	3				+24V	NC
	5				NC	+24V
	3					+24V

7f

645 840 55
645 860 55

NOTICE

(D) Handbuch auf dem Sprachausgabeelement beachten.
(GB) Notice the manual on the vocal element

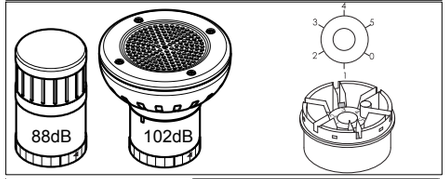

		Pin terminal element				
	Tone	1	2	3	4	5
	1	+24V	+24V	NC	NC	NC
	2		NC	+24V	NC	NC
	3		+24V	+24V	NC	NC
	4		NC	NC	+24V	NC
	5		+24V	NC	+24V	NC
	6		NC	+24V	+24V	NC
	7		+24V	+24V	+24V	NC
	8		NC	NC	NC	+24V
	9		+24V	NC	NC	+24V
	10		NC	+24V	NC	+24V
	11		+24V	+24V	NC	+24V
	12		NC	NC	+24V	+24V
	13		+24V	NC	+24V	+24V
	14		NC	+24V	+24V	+24V
	15		+24V	+24V	+24V	+24V
	1			+24V	NC	NC
	2			NC	+24V	NC
	3			+24V	+24V	NC
	4			NC	NC	+24V
	5			+24V	NC	+24V
	6			NC	+24V	+24V
	7			+24V	+24V	+24V
	1				+24V	NC
	2				NC	+24V
	3				+24V	+24V
	1				+24V	+24V

931064000101_AL
310.640.001

© (D)

WERMA