MURR ELEKTRONIK
stay connected

M12 female 0° A-cod. with cable

PUR 12x0.25 gy UL/CSA+drag ch. 10m

Female straight
M12, 12-pole
Art-No. 7005 - M12 Lite - (plastic hexagonal screw) on request
with cable sleeves
Plastic housings with good resistance against chemicals and oils.
The resistance to aggressive media should be individually tested for your application. Further details on request.
Further cable lengths on request.

Link to Product

Illustration

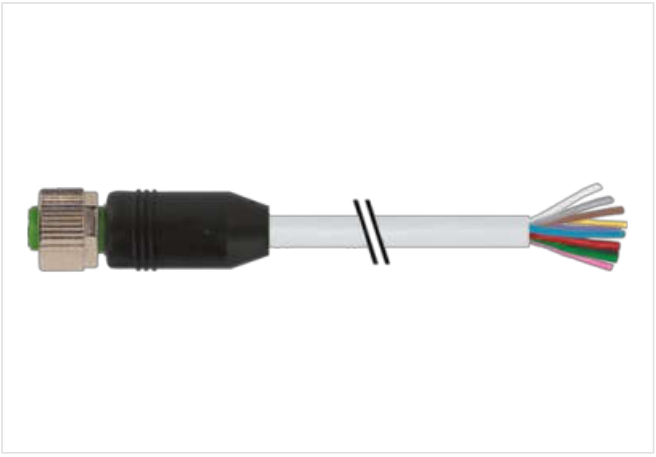

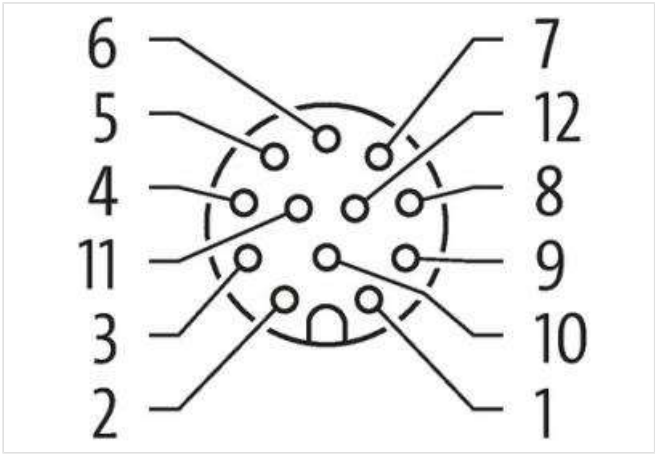

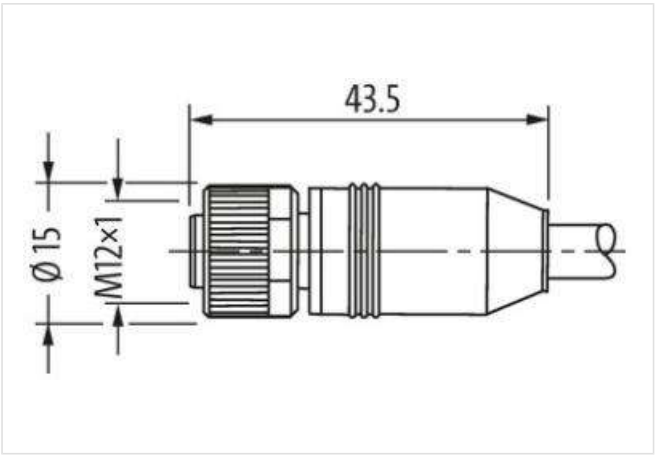

Product may differ from Image

Cable length	10 m

Side 1

Tightening torque	0,6 Nm

The information in this Product-PDF has been compiled with the utmost care.
Liability for the correctness completeness and topicality of the information is restricted to gross negligence. Version: 2024-01-31

MURR ELEKTRONIK
stay connected

Mounting method	inserted, screwed
Family construction form	M12
Coding	A
Material	PUR
Width across flats	SW13
Degree of protection (EN IEC 60529)	IP65, IP66K, IP67
Commercial data	
ECLASS-6.0	27279218
ECLASS-6.1	27279218
ECLASS-7.0	27279218
ECLASS-8.0	27279218
ECLASS-9.0	27060311
ECLASS-10.1	27060311
ECLASS-11.1	27060311
ECLASS-12.0	27060311
ETIM-5.0	EC001855
customs tariff number	85444290
GTIN	4048879290708
Packaging unit	1
Electrical data | Supply	
Operating voltage AC max.	30 V
Operating voltage DC max.	30 V
Operating voltage AC (UL-listed)	30 V
Operating voltage DC (UL-listed)	30 V
Current operating per contact max.	1,5 A
Installation | Connection	
Mounting set	M12 x 1
Device protection | Electrical	
Additional condition protection degree	inserted, screwed
Pollution Degree	3
Rated surge voltage	0,8 kV
Material group (IEC 60664-1)	I
Mechanical data	
Contour for corrugated hose	without
Mechanical data | Material data	
Coating locking	Nickeled
Coating of fitting	nickel plated
Locking material	Zinc die-casting
Material screw connection	Zinc die-casting
Mechanical data | Mounting data	
Mounting method	inserted, screwed, Shaking protection
Environmental characteristics | Climatic	
Operating temperature min.	-25 °C
Operating temperature max.	85 °C
Additional condition temperature range	depending on cable quality
Conformities, approvals	
Product standard	DIN EN 61076-2-101 (M12)
Cable	
Cable identification	301
Approval (cable)	UL (AWM-Style 20233/10978), CSA approbation; CE

The information in this Product-PDF has been compiled with the utmost care.
Liability for the correctness completeness and topicality of the information is restricted to gross negligence. Version: 2024-01-31

MURR ELEKTRONIK
stay connected

Cable weight [g/m]	69,3 g
Material wire	Cu wire, bare
Resistor (core)	max. 76 Ω/km (20 °C)
Single wire Ø (core)	0.1 mm
Construction (core)	32× 0.1 mm (multi-strand wire class 6)
Diameter (core)	12× 0.25 mm²
AWG	similar to AWG 24
Material wire isolation	PP
Material property wire insulation	CFC-, halogen-, cadmium-, silicone- and lead-free
Shore hardness wire isolation	50 ±5 D
Wire-Ø incl. isolation	1.25 mm ±5%
Color/numbering of wires	br, rd, gr, bk, ye, pk, gn, wh, bl, rdbl, grpk, vi
Stranding combination	Twisted wires rdbl, grpk and vi, over it all other wires are twisted
Shield	no
Material jacket	PUR
Shore hardness jacket	85 ±5 A
Outer-Ø (jacket)	6.9 mm ±5%
Color jacket	gray
chemical resistance	good resistance to oil, gasoline and chemicals (VDE 0472 Teil 803 Test B)
Nominal voltage	300 V
Test voltage	1500 V
Current load capacity	to DIN VDE 0298-4
Temperature range (fixed)	-40...+80 °C
Temperature range (mobile)	-20...+80 °C
Bend radius (fixed)	10× outer Ø
Bend radius (moving)	15× outer Ø
No. of bending cycles (C-track)	max. 3 Mio. (25 °C)
Travel speed (C-track)	max. 2 m/s
Acceleration (C-track)	max. 10 m/s²

The information in this Product-PDF has been compiled with the utmost care.
Liability for the correctness completeness and topicality of the information is restricted to gross negligence. Version: 2024-01-31