6,9 gRB-URB

SEMICONDUCTOR PROTECTION FUSES



690V
gRB-URB FROM 12 TO 100A
SIZE: 17 x 49

Features/Benefits

- **Extremely high Interrupting rating Fuses:** Protection of power Semiconductors as per IEC standard 269.4
- **690V Voltage Rating** as per IEC 33
- **gR Class** [Current rating 12 to 90A] as per VDE 636-23
  -Full range protection
  -Improved safety and protection
  -Allows selective coordination
- **aR Class** [Current Rating 100A] According to VDE 636-23 and IEC 269.4
- **Connections as per:**
  -German standard DIN 43653/00C
  -British standard BS 88-4
- **These fuses are UL Recognized**

c UL us

APPLICATIONS DATA

VOLTAGE RATING U_N (V)	CLASS	CURRENT RATING I_N (A)	MELTING I^2t @ 1 ms (A^2s)	TOTAL CLEARING I^2t @ RATED VOLTAGE (A^2s)	WATT LOSSES 0.8 I_N	WATT LOSSES I_N	TESTED INTERRUPTING RATING	ESTIMATED INTERRUPTING RATING
690	gRB	12 16 20 25 32 35 40 45 50 55 63 75 80 90	4.2 9.6 17.1 26.8 52.5 69 96 130 154 210 310 520 620 840	30 65 110 170 330 430 610 820 970 1320 1950 3250 3900 5300	1.95 2.2 3.0 4.4 5.0 5.2 5.8 6.3 7.2 7.4 8.0 8.8 9.4 11	3.5 4.0 5.5 8.0 9.0 9.5 10.5 11.5 13 13.5 14.5 16 17 20	200 k A @ 690 V	300 k A @ 690 V
690	URB	100	965	6150	13	23.5	200 k A @ 690 V	300 k A @ 690 V

Minimum operating voltage for separate trip-indicator: 20 V

Gross Automation (877) 268-3700 · www.ferrazshawmutsales.com · sales@grossautomation.com

6,9 gRB-URB

SEMICONDUCTOR PROTECTION FUSES

German Standard without blown fuse indication

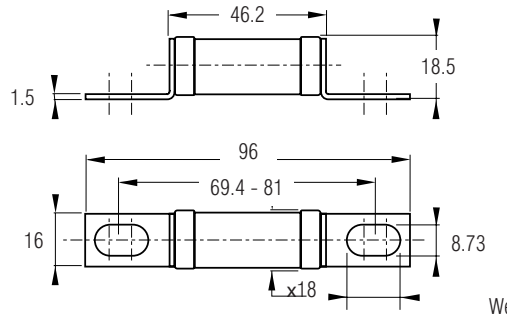

Weight: 40 g
Packaging: 10 pieces

CURRENT RATING	CATALOG NO.	REF #
12	6,9 gRB 17 D08/12	M220972
16	6,9 gRB 17 D08/16	N220973
20	6,9 gRB 17 D08/20	P220974
25	6,9 gRB 17 D08/25	Q220975
32	6,9 gRB 17 D08/32	R220976
35	6,9 gRB 17 D08/35	S220977
40	6,9 gRB 17 D08/40	T220978
45	6,9 gRB 17 D08/45	V220979
50	6,9 gRB 17 D08/50	W220980
55	6,9 gRB 17 D08/55	X220981
63	6,9 gRB 17 D08/63	Y220982
75	6,9 gRB 17 D08/75	Z220983
80	6,9 gRB 17 D08/80	A220984
90	6,9 gRB 17 D08/90	B220985
100	6,9 URB 17 D08/100	C220986

German Standard with separate blown fuse trip-indicator DIN 43623/00C

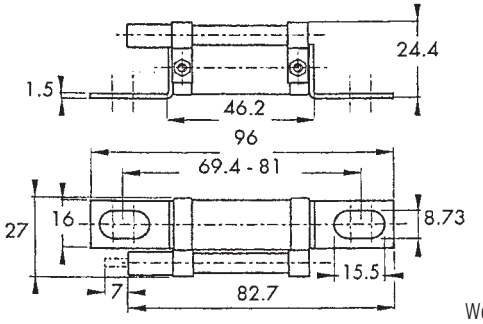

Weight: 40 g
Packaging: 10 pieces

CURRENT RATING	CATALOG NO.	REF #
12	6,9 gRB 17 D08P 12	X221004
16	6,9 gRB 17 D08P 16	Y221005
20	6,9 gRB 17 D08P 20	Z221006
25	6,9 gRB 17 D08P 25	A221007
32	6,9 gRB 17 D08P 32	B221008
35	6,9 gRB 17 D08 P 35	C221009
40	6,9 gRB 17 D08P 40	D221010
45	6,9 gRB 17 D08P 45	E221011
50	6,9 gRB 17 D08P 50	F221012
55	6,9 gRB 17 D08P 55	G221013
63	6,9 gRB 17 D08P 63	H221014
75	6,9 gRB 17 D08P 75	J221015
80	6,9 gRB 17 D08P 80	K221016
90	6,9 gRB 17 D08P 90	L221017
100	6,9 URB 17 D08P 100	M221018

British Standard without blown fuse indication

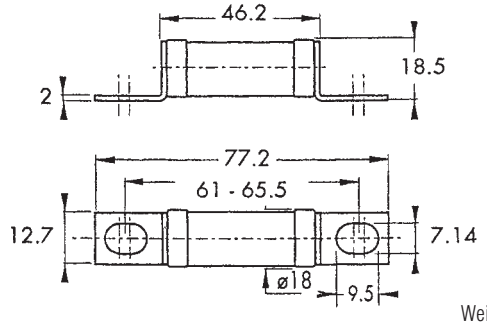

Weight: 37 g
Packaging: 10 pieces

CURRENT RATING	CATALOG NO.	REF #
12	6,9 gRB 17/12	W220957
16	6,9 gRB 17/16	X220958
20	6,9 gRB 17/20	Y220959
25	6,9 gRB 17/25	Z220960
32	6,9 gRB 17/32	A220961
35	6,9 gRB 17/35	B220962
40	6,9 gRB 17/40	C220963
45	6,9 gRB 17/45	D220964
50	6,9 gRB 17/50	E220965
55	6,9 gRB 17/55	F220966
63	6,9 gRB 17/63	G220967
75	6,9 gRB 17/75	H220968
80	6,9 gRB 17/80	J220969
90	6,9 gRB 17/90	K220970
100	6,9 URB 17/100	L220971

British Standard with separate blown fuse trip-indicator BS 88-4

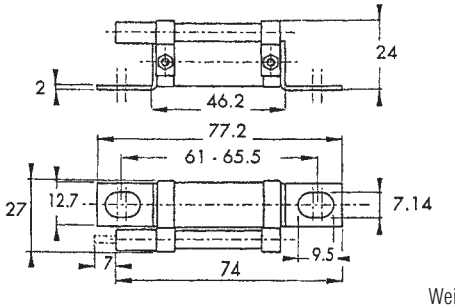

Weight: 37 g
Packaging: 10 pieces

CURRENT RATING	CATALOG NO.	REF #
12	6,9 gRB 17P12	D220987
16	6,9 gRB 17P16	E220988
20	6,9 gRB 17P20	F220989
25	6,9 gRB 17P25	G220990
32	6,9 gRB 17P32	H220991
35	6,9 gRB 17P35	J220992
40	6,9 gRB 17P40	K220993
45	6,9 gRB 17P45	L220994
50	6,9 gRB 17P50	M220995
55	6,9 gRB 17P55	N220996
63	6,9 gRB 17P63	P220997
75	6,9 gRB 17P75	Q220998
80	6,9 gRB 17P80	R220999
90	6,9 gRB 17P90	S221000
100	6,9 URB 17P100	T221001

Gross Automation (877) 268-3700 · www.ferrazshawmutsales.com · sales@grossautomation.com