PCB pocket

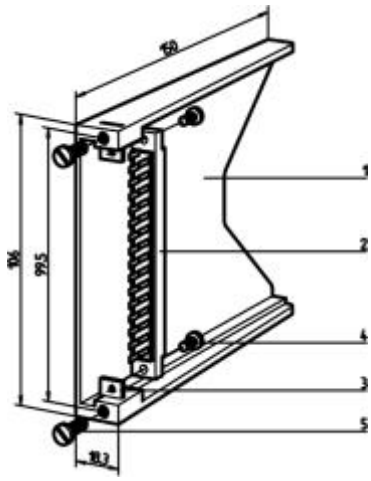

Retention bracket (DIN 41612)

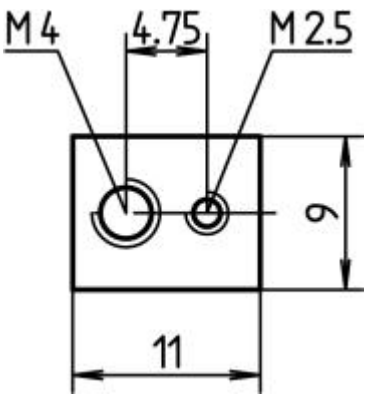

Product illustrations are exemplary illustrations and can deviate from supplied products.

Part no.: 20800-032

Features:

- Accepts PCBs in euroboard format, 100 × 160 mm
- For female connectors to EN 60603 (DIN 41612)

Technical Information:

Item	Description	Material	Colour	Qty/PU
1	PCB pocket	PBT (P)	grey	1 piece

Delivery comprises: kit

Item	Qty	Description
1	1	PCB pocket, PBT (P), grey, UL 94 V-0
3	2	Retention bracket, St, 2 mm, nickel-plated
4	2	Cheesehead screw M2.5 × 6, St, nickel-plated
5	2	Cheesehead screw M4 × 12, St, nickel-plated