# Precision pressure regulator, Series PR2-RGP

**R412010480**



## AVENTICS Series PR2 Precision pressure regulators

The AVENTICS Series PR1/PR2 is designed for applications that demand fast responses to the slightest fluctuation in compressed air. They can be adjusted precisely and are an alternative to electronic pressure regulators. Precision pressure regulators are used to achieve extremely accurate pressure control independent from the pilot pressure and the flow rate. They offer high performance and flexibility, combined with increased reliability.



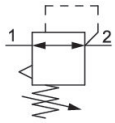


## Technical data

| | |
|---|---|
| Industry | Industrial |
| Function | Precision pressure regulator |
| Parts | Precision pressure regulator |
| Mounting orientation | Any |
| Regulator type | Diaphragm-type pressure regulator |
| Port | G 1/4 |
| Nominal flow Qn | 380 l/min |
| Min. regulation range | 0.1 bar |
| Max. regulation range | 4 bar |
| Min. working pressure | 0.5 bar |
| Max. working pressure | 12 bar |
| Min. ambient temperature | -10 °C |
| Max. ambient temperature | 60 °C |
| Activation | Mechanical |
| Regulator function | with relieving air exhaust |
| Pressure supply | single |
| Max. internal air consumption $q_v$ | 2.5 l/min |
| Medium | Compressed air |
| Recommended pre-filtering | 5 µm |

# Precision pressure regulator, Series PR2-RGP

R412010480

| | |
|---|---|
| Weight | 0.24 kg |

## Material

| | |
|---|---|
| Housing material | Polyamide |
| Seal material | Acrylonitrile butadiene rubber |
| Part No. | R412010480 |

## Technical information

The pressure dew point must be at least 15 °C less than ambient and medium temperature and may not exceed 3 °C.

Relieving exhaust: > 300 l/min at 6 bar

Precision: < 0.005 bar

Mounting: mounting bracket R412010482 or installation in piping

Notice: This product may only be operated with oil-free, dry compressed air.

Nominal flow Qn with secondary pressure p2 = 6,3 bar at Δp = 1 bar

## Dimensions in mm

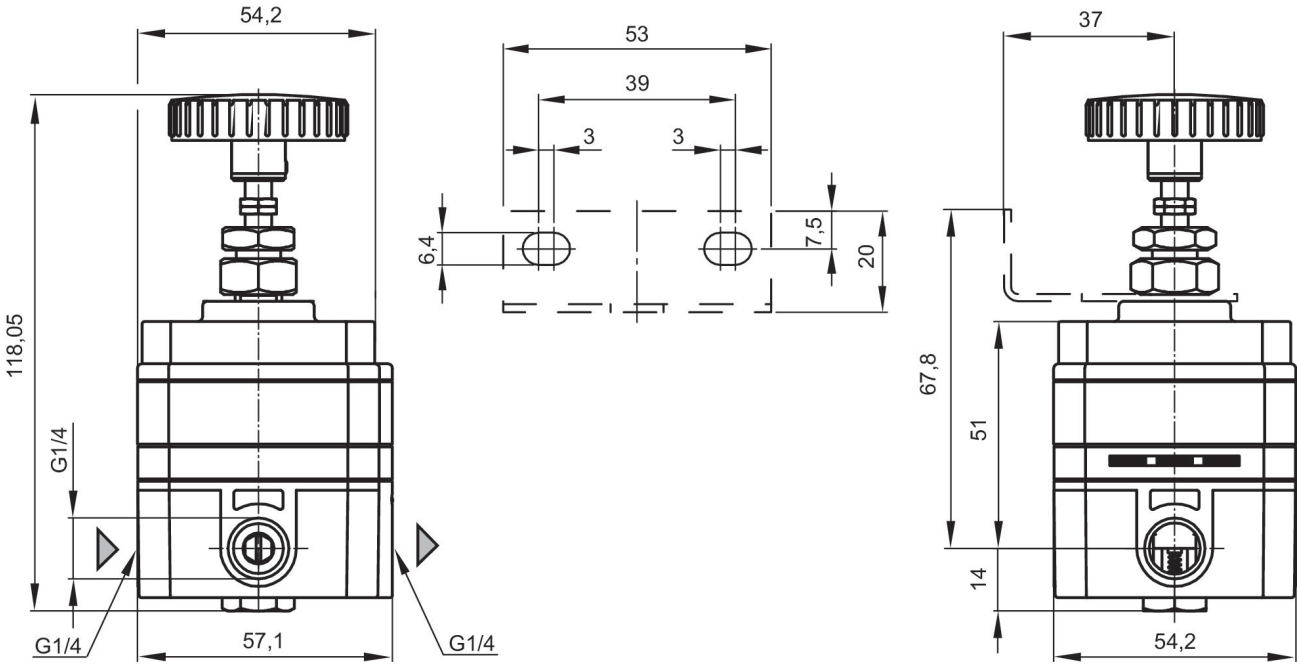


A1 = input
A2 = output

# Precision pressure regulator, Series PR2-RGP

R412010480

## Exhaust characteristics

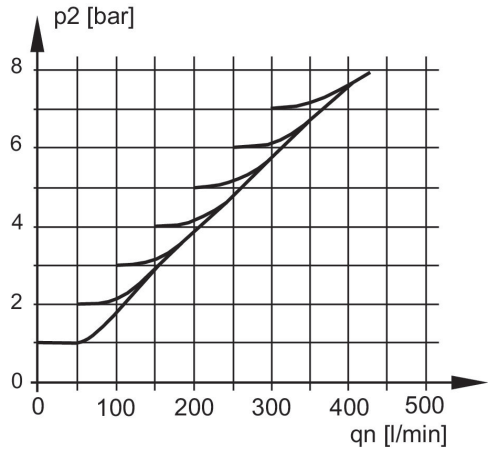


p2 = Secondary pressure
qn = Nominal flow

## Pressure characteristics curve

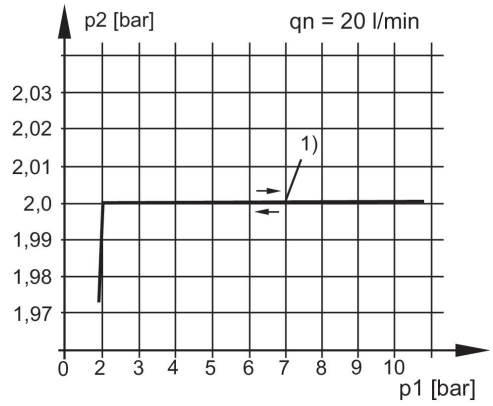


p1 = Working pressure
p2 = Secondary pressure
qn = Nominal flow
1) Starting point

## Flow rate characteristic, p2 = 0,05 - 7 bar

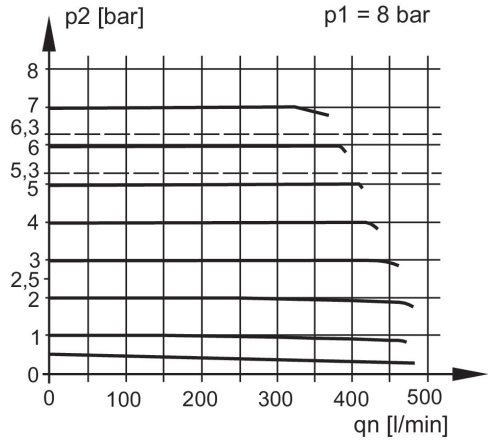


p1 = Working pressure
p2 = Secondary pressure
qn = Nominal flow