E11228

Y connection cable

YDOGH080MSS0,15H08STGH040MSS

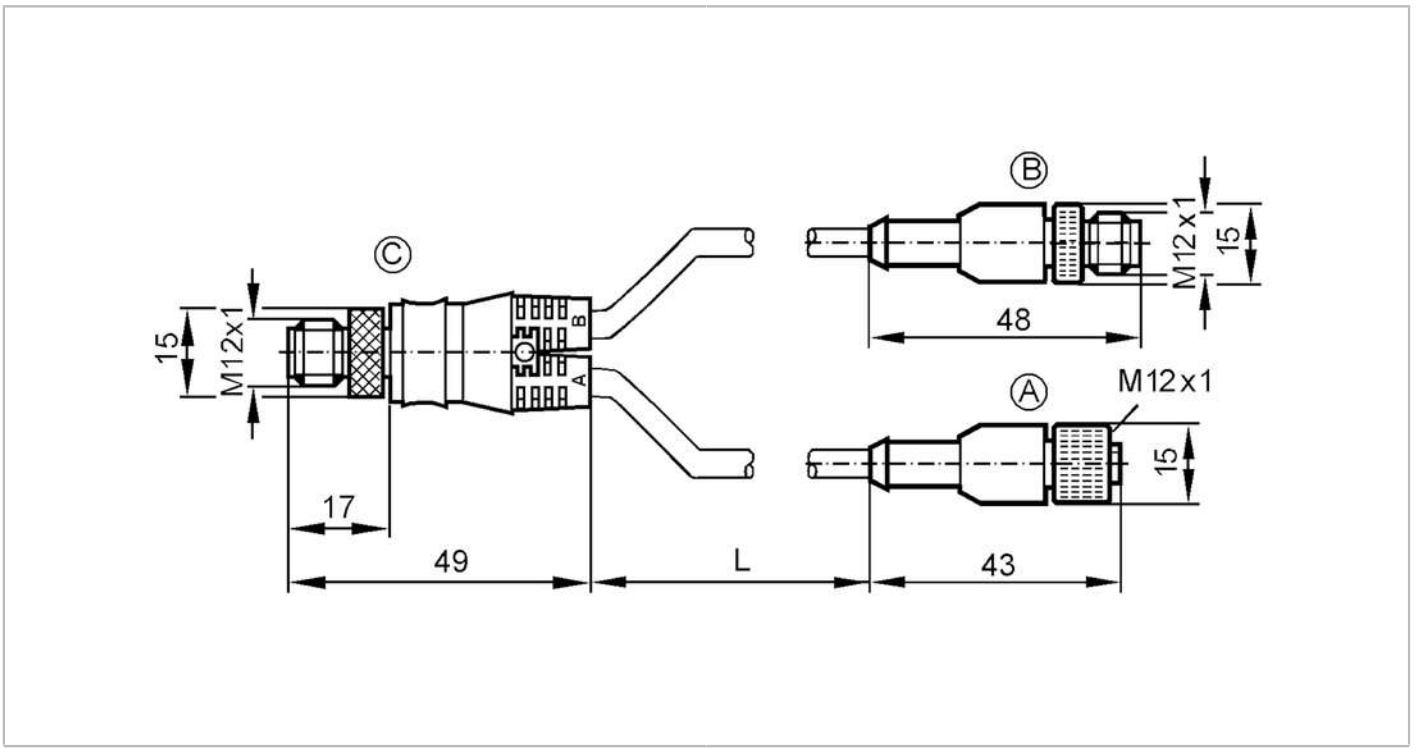

Application		
Special feature		Halogen-free
Electrical data		
Operating voltage	[V]	< 30 AC / < 36 DC
Operating conditions		
Ambient temperature	[°C]	-25...80
Protection		IP 68
Mechanical data		
Weight	[g]	63
Materials		PUR
Moulded-body material		PUR
Material nut		brass, nickel-plated
Remarks		
Pack quantity		1 pcs.

Electrical connection - socket A

Connector: 1 x M12, straight; coding: A; Moulded body: PUR; Locking: brass, nickel-plated



E11228

Y connection cable

YDOGH080MSS0,15H08STGH040MSS

Connection

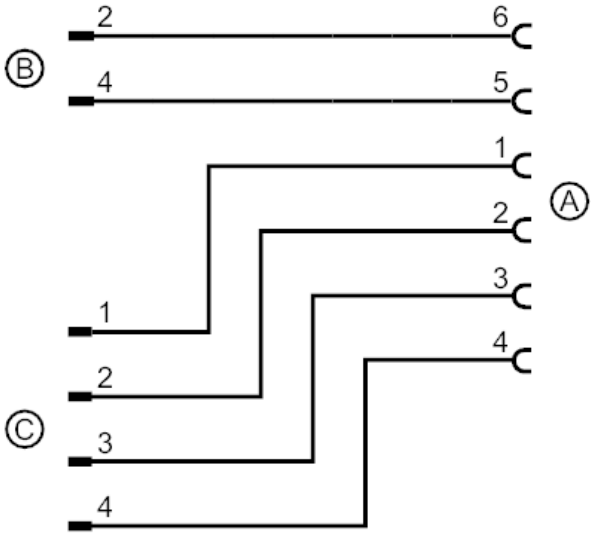

Electrical connection - plug B

Cable: 0.15 m, PUR, Halogen-free, black, Ø 6.2 mm; 2 x 0.25 mm²

Connector: 1 x M12, straight; coding: A; Moulded body: PUR; Locking: brass, nickel-plated



Electrical connection - plug C

Cable: 0.15 m, PUR, Halogen-free, black, Ø 6.2 mm; 4 x 0.25 mm²

Connector: 1 x M12, straight; coding: A; Moulded body: PUR; Locking: brass, nickel-plated

