DMO series - medium - Rubber hose



ID/OD (mm)
8 x 14

Length (m)
10

Coupler
BSI 06

Flow rate (l/min)
500

Swivel inlet (BSPP)
G 3/8 F

Weight (kg)
16

Technology
Pipe locked with ratchet stop

Max operating pressure
12 bar

Construction
Epoxy-coated steel case

Connection
1 m of inlet supply hose

Equipped with
Fixed bracket

Description

Prevost UK LTD - Unit G, Tower Business Park - Commercial Road - BB3 OFJ Darwen - Lancashire - United kingdom
Phone. (+44) 01254 873 389 -sales@prevost-ltd.co.uk - www.prevost.eu

Reference	ID/OD (mm)	Length (m)	Coupler	Flow rate (l/min)	Swivel inlet (BSPP)	Weight (kg)
DMO 0810BS	8 x 14	10	BSI 06	500	G 3/8 F	16
DMO 0815BS	8 x 14	15	BSI 06	350	G 3/8 F	17.5
DMO 0820BS	8 x 14	20	BSI 06	260	G 3/8 F	19
DMO 1010BS	10 x 17	10	BSI 06	900	G 3/8 F	17
DMO 1015BS	10 x 17	15	BSI 06	700	G 3/8 F	19
DMO 1020BS	10 x 17	20	BSI 06	660	G 3/8 F	22
DMO 0810ES	8 x 14	10	ESI 07	500	G 3/8 F	16
DMO 0815ES	8 x 14	15	ESI 07	350	G 3/8 F	17.5
DMO 0820ES	8 x 14	20	ESI 07	260	G 3/8 F	19
DMO 1010ES	10 x 17	10	ESI 07	900	G 3/8 F	17
DMO 1015ES	10 x 17	15	ESI 07	700	G 3/8 F	19
DMO 1020ES	10 x 17	20	ESI 07	660	G 3/8 F	22
DMO 1315ES	13 x 20	15	ESI 07	1400	G 1/2 M	22
DMO 0810IS	8 x 14	10	ISI 06	500	G 3/8 F	16

Prevost UK LTD - Unit G, Tower Business Park - Commercial Road - BB3 OFJ Darwen - Lancashire - United kingdom
Phone. (+44) 01254 873 389 -sales@prevost-ltd.co.uk - www.prevost.eu

Reference	ID/OD(mm)	Length (m)	Coupler	Flow rate (l/min)	Swivelinlet (BSPP)	Weight(kg)
DMO 0815IS	8 x 14	15	ISI 06	350	G 3/8 F	17.5
DMO 0820IS	8 x 14	20	ISI 06	260	G 3/8 F	19
DMO 1010IS	10 x 17	10	ISI 06	833	G 3/8 F	17
DMO 1015IS	10 x 17	15	ISI 06	700	G 3/8 F	19
DMO 1020IS	10 x 17	20	ISI 06	660	G 3/8 F	22
DMO 1315IS	13 x 20	15	ISI 08	1400	G 1/2 M	22
DMO 0810CS	8 x 14	10	CSI 06	500	G 3/8 F	16
DMO 0815CS	8 x 14	15	CSI 06	350	G 3/8 F	17.5
DMO 0820CS	8 x 14	20	CSI 06	260	G 3/8 F	19
DMO 1010CS	10 X 17	10	CSI 06	833	G 3/8 F	17
DMO 1015CS	10 x 17	15	CSI 06	700	G 3/8 F	19
DMO 1020CS	10 x 17	20	CSI 06	660	G 3/8 F	22
DMO 1315CS	13 x 20	15	CSI 08	1400	G 1/2 M	22

Prevost UK LTD - Unit G, Tower Business Park - Commercial Road - BB3 OFJ Darwen - Lancashire - United kingdom
Phone. (+44) 01254 873 389 -sales@prevost-ltd.co.uk - www.prevost.eu

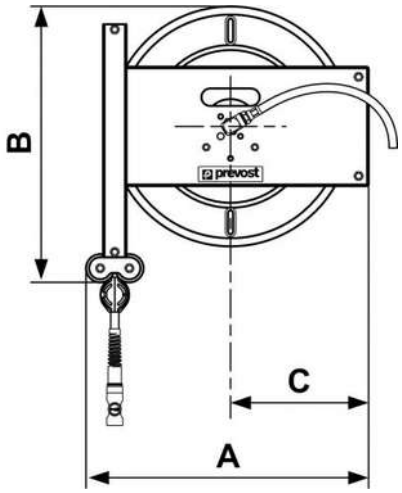

Dimensions			
Reference	**A mm**	**B mm**	**C mm**
DMO 0810BS	485	475	237
DMO 0815BS	485	475	237
DMO 0820BS	485	475	237
DMO 1010BS	485	475	237
DMO 1015BS	485	475	237
DMO 1020BS	485	475	237
DMO 0810ES	485	475	237
DMO 0815ES	485	475	237
DMO 0820ES	485	475	237
DMO 1010ES	485	475	237

Prevost UK LTD - Unit G, Tower Business Park - Commercial Road - BB3 OFJ Darwen - Lancashire - United kingdom
Phone. (+44) 01254 873 389 -sales@prevost-ltd.co.uk - www.prevost.eu

Reference	A mm	B mm	C mm
DMO 1015ES	485	475	237
DMO 1020ES	485	475	237
DMO 1315ES	485	475	237
DMO 0810IS	485	475	237
DMO 0815IS	485	475	237
DMO 0820IS	485	475	237
DMO 1010IS	485	475	237
DMO 1015IS	485	475	237
DMO 1020IS	485	475	237
DMO 1315IS	485	475	237
DMO 0810CS	485	475	237
DMO 0815CS	485	475	237
DMO 0820CS	485	475	237
DMO 1010CS	485	475	237
DMO 1015CS	485	475	237
DMO 1020CS	485	475	237

Reference	A mm	B mm	C mm
DMO 1315CS	485	475	237

Prevost UK LTD - Unit G, Tower Business Park - Commercial Road - BB3 OFJ Darwen - Lancashire - United kingdom
Phone. (+44) 01254 873 389 -sales@prevost-ltd.co.uk - www.prevost.eu