Product data sheet
Characteristics

XZCR1512041C2
jumper cable XZ - male straight M12 4-pin - female elbowed M12 4-pin - PUR 2m



Main

Accessory / separate part category	Cabling accessory
Accessory / separate part type	Jumper cable

Complementary

Jumper cable end 1	M12 male 4 pins straight connector with screw-on
Jumper cable end 2	M12 female 4 pins elbowed connector with screw-on
Cable composition	4 x 0.34 mm²
Cable length	2 m
Wire insulation material	PUR
Cable outer diameter	5.2 mm
[Ue] rated operational voltage	250 V AC 300 V DC
[In] rated current	4 A
Insulation resistance	>= 1000 MOhm
Maximum resistance across terminals	5000 mOhm
Net weight	0.095 kg

Environment

IP degree of protection	IP69K IP67 IP65
Product certifications	CULus
Ambient air temperature for operation	-35…90 °C static -5…90 °C flexing
Ambient air temperature for storage	-35…100 °C

Packing Units

Package 1 Weight	0.088 kg
Package 1 Height	0.300 dm
Package 1 width	2.400 dm
Package 1 Length	2.400 dm

The information provided in this documentation contains general descriptions and/or technical characteristics of the performance of the products contained herein.
This documentation is not intended as a substitute for and is not to be used for determining suitability or reliability of these products for specific user applications.
It is the duty of any such user or integrator to perform the appropriate and complete risk analysis, evaluation and testing of the products with respect to the relevant specific application or use thereof.
Neither Schneider Electric Industries SAS nor any of its affiliates or subsidiaries shall be responsible or liable for misuse of the information contained herein.

Offer Sustainability

Sustainable offer status	Green Premium product
REACh Regulation	REACh Declaration
EU RoHS Directive	Pro-active compliance (Product out of EU RoHS legal scope) EU RoHS Declaration
Mercury free	Yes
RoHS exemption information	Yes
Environmental Disclosure	Product Environmental Profile
Circularity Profile	End Of Life Information

Contractual warranty

Warranty	18 months

XZCR1512041C2

Dimensions

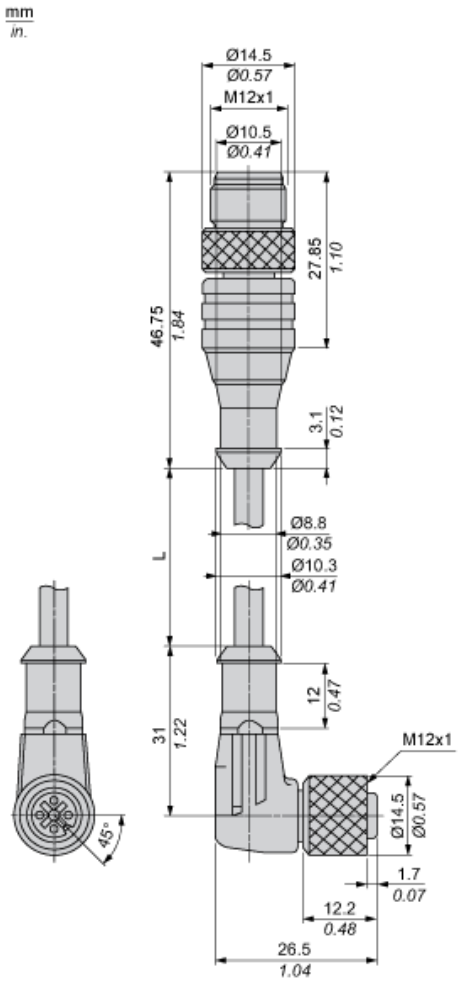

L : Lenght of cable

Connections and Schemes

