PRODUCT DETAILS

ARTICLE: 14328FE

WHEEL D 160X45/60 NYLON BEARING BOLT HOLE F.12 FORK M22



Wheel series D

Wheels with black rubber ring on thermoplastic core, available with roller bearings or nylon friction bearings.
The wheel is fitted with bushes.

Castor series M22

M22 series, Medium-light pressed steel fork assemblies; swivel version has double ball raceways. Zincplated.

Sigle bolt hole fixing for bolt diam. 12-14 mm.

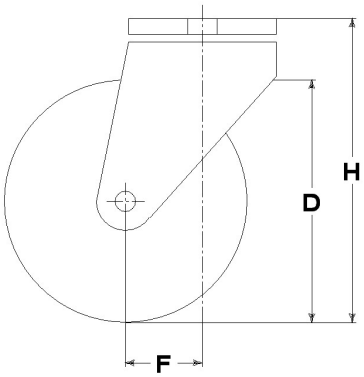

Technical data

Wheel diameter	D	160 mm
Tyre width	E	45,0 mm
Bore diameter	d	20 mm
Weight article		2,110 kg
Hub width	L	60 mm
Overall height	H	196 mm
Fixing bolt diameter	g	M12-14
Offset	F	56 mm
Fork width	U	60 mm
Load Capacity		135 kg

Related Articles

Spare part wheel: 13128
Version with thread-guards: 14328PFFE
Version with footguard: 14328PPFE
Version with trailing brake: 14328FRFE
Version with trailing brake and thread-guards: 14328FRPFFE
Version with trailing brake and footguard: 14328FRPPFE

GENERAL INFORMATION / RECOMMENDATIONS AND WARNINGS
The cited text and the complete catalogue in their most up-dated versions are available in the OEM's website page www.lagspa.it/downloads. The dimensions, descriptions, specifications and illustrations herein are indicative and subject to variations without notice. The fact that products are illustrated herein does not necessarily imply they are available from stock nor does it place us under any obligation to supply them.
Tests carried out refer to the original products with original accessories: the replacement of one of the components with others of different manufacture might prevent the same results from being achieved and will automatically invalidate any guarantee. Please contact our technical service concerning any special application.