Data sheet

Three-phase monitoring relay
CM-PFS

The CM-PFS is a three-phase monitoring relay that is used to monitor three phase mains for incorrect phase sequence and phase failure.

All devices are available with two different terminal versions. You can choose between the proven screw connection technology (double-chamber cage connection terminals) and the completely tool-free Easy Connect Technology (Push-in terminals).



2CDC 251 014 V0012

Characteristics

- Monitoring of three-phase mains for phase sequence and failure
- Powered by the measuring circuit
- Closed-circuit principle
- Screw connection technology or Easy Connect Technology available
- Housing material for highest fire protection classification UL 94 V-0
- Tool-free mounting on DIN rail as well as demounting
- 2 c/o (SPDT) contacts
- 22.5 mm (0.89 in) width
- 2 LEDs for the indication of operational states

Approvals

- UL 508, CAN/CSA C22.2 No.14
- GL
- IEC/EN 60947-5-1, CB scheme
- GB14048.5 - 2001, CCC
- GOST

Marks

- CE
- C-Tick

Order data

Three-phase monitoring relay

Type	Rated control supply voltage = measuring voltage	Connection technology	Order code
CM-PFS.P	3 x 200-500 V AC	Push-in terminals	1SVR 740 824 R9300
CM-PFS.S	3 x 200-500 V AC	Screw type terminals	1SVR 730 824 R9300

Accessories

Type	Description	Order code
ADP.01	Adapter for screw mounting	1SVR 430 029 R0100
MAR.01	Marker label	1SVR 366 017 R0100
COV.11	Sealable transparent cover	1SVR 730 005 R0100

Connection technology

Maintenance free Easy Connect Technology with push-in terminals

Type designation CM-xxS.yyP

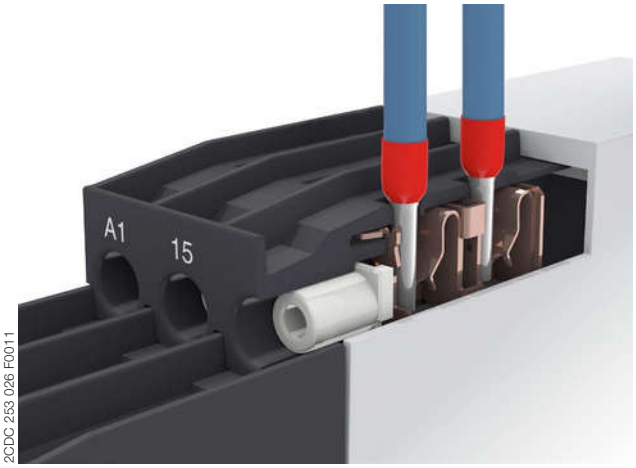

2CDC 253 026 F0011

Push-in terminals

- Tool-free connection of rigid and flexible wires with wire end ferrule according to DIN 46228-1-A, DIN 46228-4-E
  Wire size: 2 x 0.5-1.5 mm², (2 x 20 - 16 AWG)
- Easy connection of flexible wires without wire end ferrule by opening the terminals
- No retightening necessary
- One operation lever for opening both connection terminals
- For triggering the lever and disconnecting of wires you can use the same tool (Screwdriver according to DIN ISO 2380-1 Form A 0.8 x 4 mm (0.0315 x 0.157 in), DIN ISO 8764-1 PZ1 ø 4.5 mm (0.177 in))
- Constant spring force on terminal point independent of the applied wire type, wire size or ambient conditions (e. g. vibrations or temperature changes)
- Opening for testing the electrical contacting
- Gas-tight

Approved screw connection technology with double-chamber cage connection terminals

Type designation CM-xxS.yyS

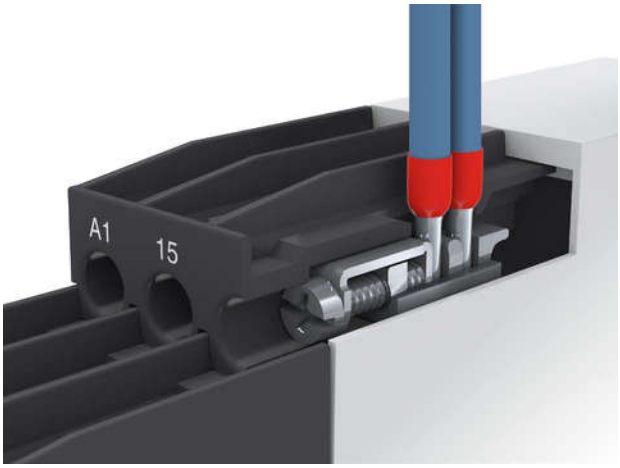

2CDC 253 025 F0011

Double-chamber cage connection terminals

- Terminal spaces for different wire sizes:
  fine-strand with/without wire end ferrule:
  1 x 0.5-2.5 mm² (2 x 20 - 14 AWG),
  2 x 0.5-1.5 mm² (2 x 20 - 16 AWG)
  rigid:
  1 x 0.5-4 mm² (1 x 20 - 12 AWG),
  2 x 0.5-2.5 mm² (2 x 20 - 14 AWG)
- One screw for opening and closing of both cages
- Pozidrive screws for pan- or crosshead screwdrivers according to DIN ISO 2380-1 Form A 0.8 x 4 mm (0.0315 x 0.157 in), DIN ISO 8764-1 PZ1 ø 4.5 mm (0.177 in)

Both the Easy Connect Technology with push-in terminals and screw connection technology with double-chamber cage connection terminals have the same connection geometry as well as terminal position.

Functions

Operating controls

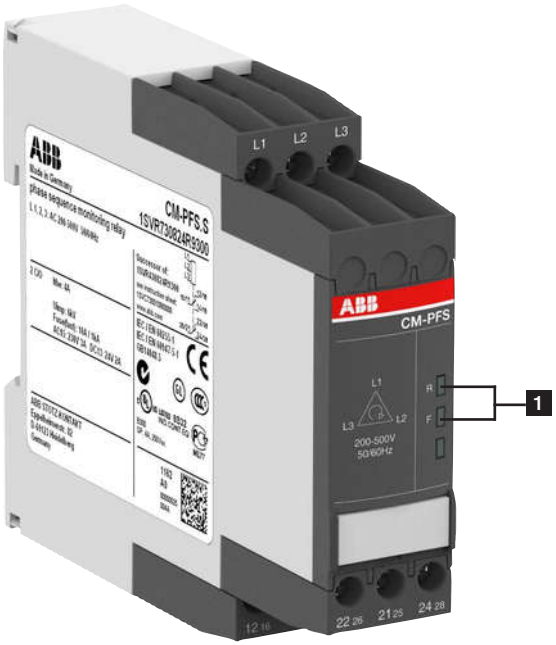

1 Indication of operational states

R: yellow LED – status indication of the output relays

F: red LED – fault message

Application

The CM-PFS is used to monitor three-phase mains for incorrect phase sequence and phase failure.

Operating mode

The three-phase main to be monitored is connected to terminals L1, L2, L3 in accordance to the wiring diagram.

The device operates according to the closed-circuit principle – incorrect phase sequence or phase failure: relays de-energize.

The signalling of status indication is made by means of the front-face LEDs.

Function diagram

Phase sequence and phase failure monitoring

If all phases are present with the correct phase sequence, the output relays energize after the start-up delay t_s is complete.

If a phase failure or a phase sequence error occurs, the output relays de-energize instantaneously.

The LED R is on when output relays are energized.

In case of motors which continue running with only two phases, the CM-PFS detects phase failure if the reverse fed voltage is less than 60% of the originally applied voltage.

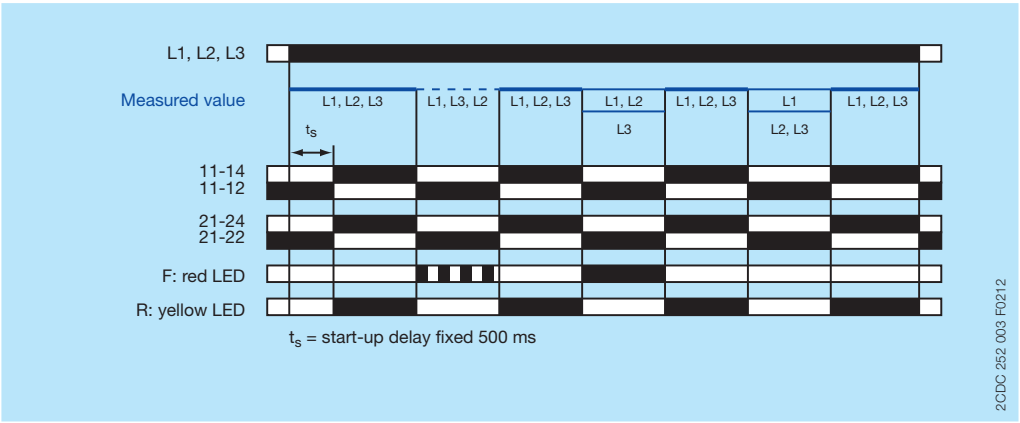

Electrical connection

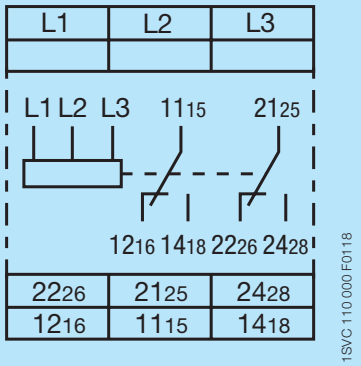

L1, L2, L3	Control supply voltage = measuring voltage
11_{15}-12_{16}/14_{18}	Output contacts –
21_{25}-22_{26}/24_{28}	closed-circuit principle

Connection diagram

Technical data

Data at T_a = 25 °C and rated values, unless otherwise indicated

Input circuits

Supply circuit = measuring circuit		**L1, L2, L3**
Rated control supply voltage U_s = measuring voltage		3 x 200-500 V AC
Rated control supply voltage U_s tolerance		-15...+10 %
Rated frequency		50/60 Hz
Frequency range		45-65 Hz
Typical current / power consumption	400 V AC	16 mA / 11 VA

Measuring circuit		**L1, L2, L3**
Monitoring functions		phase failure
		phase sequence
Measuring range		3 x 200-500 V AC
Threshold value for phase failure	U_{min}	0.6 x U_n
Hysteresis related to the threshold value		-
Rated frequency of the measuring signal		50/60 Hz
Frequency range of the measuring signal		45-65 Hz
Response time		500 ms
Measuring principle		True RMS

Timing circuit	
Start-up delay t_S	fixed 500 ms

User interface

Indication of operational states		
Relay status R1, R2	R: yellow LED	Output relay energized
Fault message	F: red LED	Phase failure
		Phase sequence error

Output circuits

Kind of output	11(15)-12(16)/14(18)	relay, 1st c/o (SPDT) contact
	21(25)-22(26)/24(28)	relay, 2nd c/o (SPDT) contact
		1 x 2 c/o (SPDT) contacts
Operating principle		closed-circuit principle [1]
Contact material		AgNi alloy, Cd free
Rated operational voltage (IEC 60947-1)		250 V AC
Minimum switching voltage / Minimum switching current		24 V / 10 mA
Maximum switching voltage / Maximum switching current		‚Load limit curves' on page 7
Rated operational current I_e (IEC/EN 60947-5-1)	AC12 (resistive) at 230 V	4 A
	AC15 (inductive) at 230 V	3 A
	DC12 (resistive) at 24 V	4 A
	DC13 (inductive) at 24 V	2 A
AC rating (UL 508)	utilization category	B 300, pilot duty
	(Control Circuit Rating Code)	general purpose (250 V, 4 A, cos phi 0.75)
	max. rated operational voltage	300 V AC
	max. continuous thermal current at B 300	5 A
	max. making/breaking apparent power at B 300	3600/360 VA
Mechanical lifetime		30 x 10^6 switching cycles
Electrical lifetime	AC12, 230 V, 4 A	0.1 x 10^6 switching cycles
Maximum fuse rating to achieve short-circuit protection	n/c contact	6 A fast-acting
	n/o contact	10 A fast-acting
Conventional thermal current I_{th} acc. IEC/EN 60947-1		4 A

[1] Closed-circuit principle: output relays de-energize if the measured value exeeds/drops below the threshold.

General data

MTBF		on request	
Duty time		100 %	
Dimensions (W x H x D)	product dimensions	22.5 x 85.6 x 103.7 mm (0.89 x 3.37 x 4.08 in)	
	packaging dimensions	97 x 109 x 30 mm (3.82 x 4.29 x 1.18 in)	
Weight		**Screw connection technology**	**Easy Connect Technology (push-in)**
	net weight	0.128 kg (0.282 lb)	0.120 kg (0.265 lb)
	gross weight	0.156 kg (0.344 lb)	0.147 kg (0.324 lb)
Mounting		DIN rail (IEC/EN 60715), snap-on mounting without any tool	
Mounting position		any	
Minimum distance to other units	vertical/ horizontal	≥ 10 mm (0.39 in) if the control supply voltage is higher than 440 V	
Degree of protection	housing / terminal	IP50 / IP20	

Electrical connection

		Screw connection technology	**Easy Connect Technology (push-in)**
Wire size	fine-strand with(out) wire end ferrule	1 x 0.5-2.5 mm² (1 x 20-14 AWG) 2 x 0.5-1.5 mm² (2 x 20-16 AWG)	2 x 0.5-1.5 mm² (2 x 20-16 AWG)
	rigid	1 x 0.5-4 mm² (1 x 20-12 AWG) 2 x 0.5-2.5 mm² (2 x 20-14 AWG)	2 x 0.5-1.5 mm² (2 x 20-16 AWG)
Stripping length		8 mm (0.32 in)	
Tightening torque		0.6 - 0.8 Nm (5.31 - 7.08 lb.in)	-

Environmental data

Ambient temperature ranges	operation	-25...+60 °C
	storage	-40...+85 °C
	transport	-40...+85 °C
Climatic category	IEC/EN 60721-3-3	3K3
Damp heat, cyclic	IEC/EN 60068-2-30	6 x 24 h cycle, 55 °C, 95 % RH
Vibration, sinusoidal	IEC/EN 60255-21-1	Class 2
Shock	IEC/EN 60255-21-2	Class 2

Isolation data

Rated impulse withstand voltage U_{imp} (IEC/EN 60947-1, IEC/EN 60664-1)	supply circuit / output circuit	6 kV
	output circuit 1 / output circuit 2	4 kV
Pollution degree (IEC/EN 60664-1)		3
Overvoltage category (IEC/EN 60664-1)		III
Rated insulation voltage U_i (IEC/EN 60947-1, IEC/EN 60664-1)	supply circuit / output circuit	600 V
	output circuit 1 / output circuit 2	300 V
Basic insulation for rated control supply voltage (IEC/EN 60664-1)	supply circuit / output circuit	600 V AC
Protective separation (IEC/EN 61140, EN 50178)	supply circuit / output circuit	n/a
Test voltage (routine test)	supply circuit / output circuit	2.5 kV, 50 Hz, 1 s
	output circuit 1 / output circuit 2	2.5 kV, 50 Hz, 1 s

Standards

Product standard	IEC/EN 60255-1:2010
Other standards	EN 50178, IEC/EN 60204
Low Voltage Directive	2006/95/EC
EMC directive	2004/108/EC
RoHS Directive	2002/95/EC

Electromagnetic compatibility

Interference immunity to		IEC/EN 61000-6-1, IEC/EN 61000-6-2
electrostatic discharge	IEC/EN 61000-4-2	Level 3, 6 kV / 8 kV
radiated, radio-frequency, electromagnetic field	IEC/EN 61000-4-3	Level 3, 10 V/m (1 GHz) / 3 V/m (2 GHz) / 1 V/m (2.7 GHz)
electrical fast transient/burst	IEC/EN 61000-4-4	Level 3, 2 KV / 5 kHz
surge	IEC/EN 61000-4-5	Level 3, 2 kV L-L
conducted disturbances, induced by radio-frequency fields	IEC/EN 61000-4-6	Level 3, 10 V
voltage dips, short interruptions and voltage variations	IEC/EN 61000-4-11	Class 3
harmonics and interharmonics	IEC/EN 61000-4-13	Class 3
Interference emission		EN 61000-6-3, EN 61000-6-4
high-frequency radiated	IEC/CISPR 22, EN 55022	Class B
high-frequency conducted	IEC/CISPR 22, EN 55022	Class B

Technical diagrams

Load limit curves

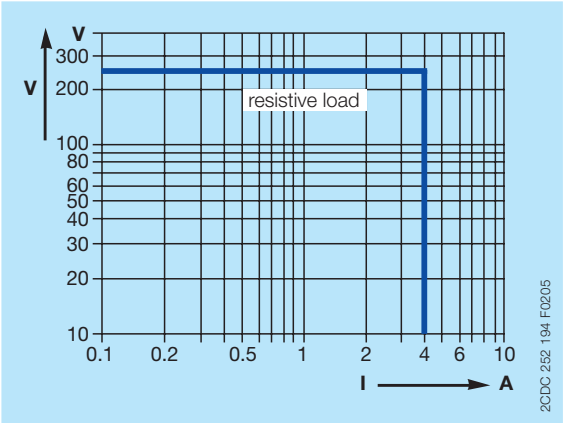

AC load (resistive)

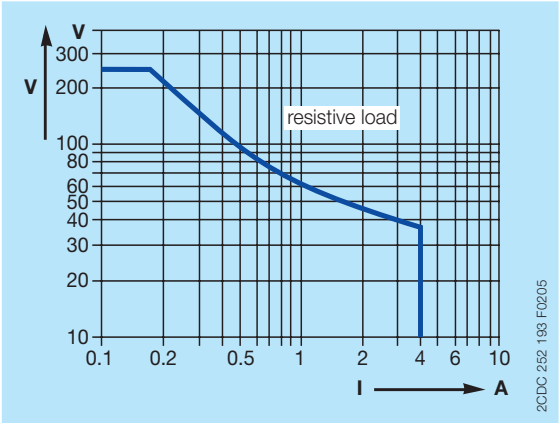

DC load (resistive)

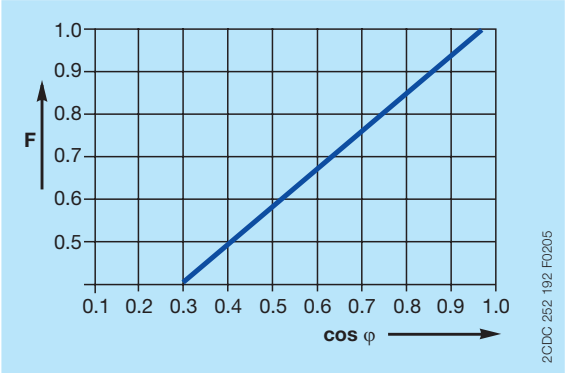

Derating factor F for inductive AC load

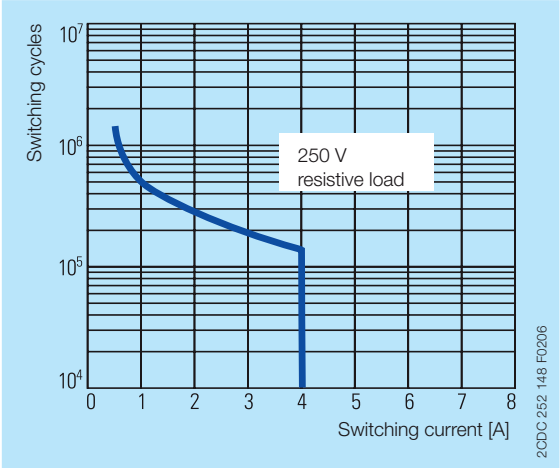

Contact lifetime

Dimensions

in **mm** and *inches*

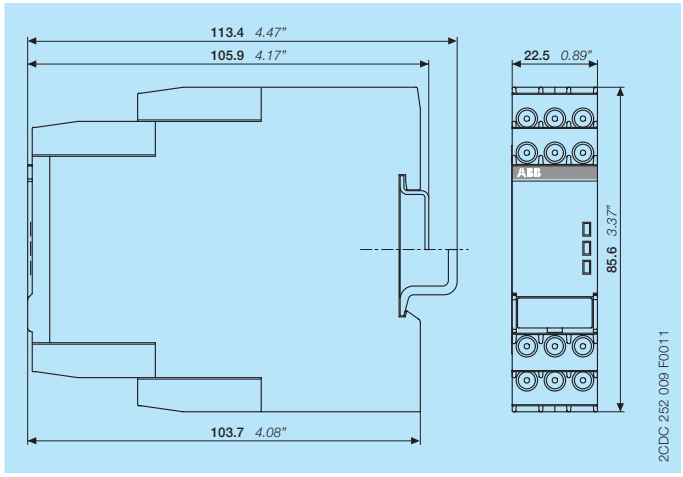

Accessories

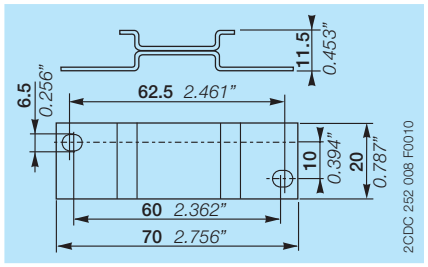

ADP.01 - Adapter for screw mounting

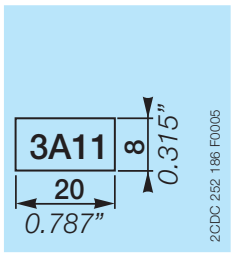

MAR.01 - Marker label

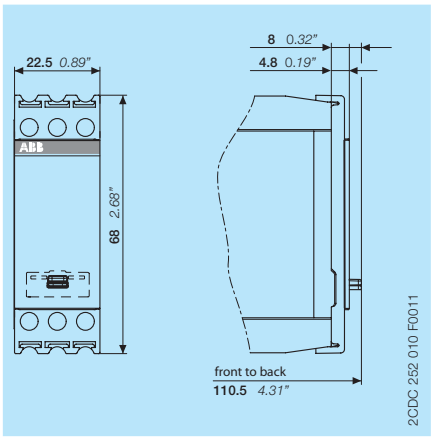

COV.11 - Sealable transparent cover

Further documentation

Document title	Document type	Document number
Electronic Products and Relays	Catalog	2CDC 110 004 C02xx
CM-PAS, CM-PFS, CM-PSS, CM-PVS	Instruction manual	1SVC 630 510 M0000

You can find the documentation on the internet at www.abb.com/lowvoltage -> Control Products -> Electronic Relays and Controls -> Three Phase Monitors

Contact us

ABB STOTZ-KONTAKT GmbH
P. O. Box 10 16 80
69006 Heidelberg, Germany
Phone: +49 (0) 6221 7 01-0
Fax: +49 (0) 6221 7 01-13 25
E-mail: info.desto@de.abb.com

You can find the address of your local sales organisation on the ABB home page
http://www.abb.com/contacts
-> Low Voltage Products

Document number 2CDC 112 192 D0201 (11.2012)

Note:
We reserve the right to make technical changes or modify the contents of this document without prior notice. With regard to purchase orders, the agreed particulars shall prevail. ABB AG does not accept any responsibility whatsoever for potential errors or possible lack of information in this document.

We reserve all rights in this document and in the subject matter and illustrations contained therein. Any reproduction, disclosure to third parties or utilization of its contents – in whole or in parts – is forbidden without prior written consent of ABB AG.

Copyright© 2012 ABB
All rights reserved