sferaco
VALVES & FITTINGS

REF. 340 - 348

NO POLLUTION CHECK VALVE PN10







Size :	DN 3/4" to 2"
Ends :	Female Male BSP
Min Temperature :	+ 5°C
Max Temperature :	+ 90°C
Max Pressure :	10 Bars
Specifications :	Free nut / Male Controlable Low head loss
Materials :	Brass body

*the installation defects and wear defects are not covered by the guarantee

Sferaco 90 rue du Ruisseau 38297 St Quentin Fallavier Tel: + 33 (0) 474.94.15.90 Fax: + 33 (0) 474.95.62.08 Internet: www.sferaco.fr E-mail : sferaco@sferaco.fr

Information provided as an indication and subject to possible modification

NO POLLUTION CHECK VALVE PN10

SPECIFICATIONS :

- Respect the flow direction indicated by the arrow
- Free nut / Male BSP
- Controlable
- Weak head loss thanks to the cylindrical internal designing
- Stainless steel spring
- NBR gasket
- Brass CW617N body for a better mechanical strength
- 3 differents caps (Hostaform, brass and no losable brass caps) to control thickness
- Double axial and lateral guide for a better centering of the throttle on the seat
- Cap threaded 1/4“ BSP
- 10 years manufacture warranty (the installation defects and wear defects are not covered by the guarantee)

USE :

- Water distribution
- Min Temperature Ts : + 5°C
- Max Temperature Ts :+ 90°C
- Max Pressure Ps : 10 bars

HEAD LOSS GRAPH :

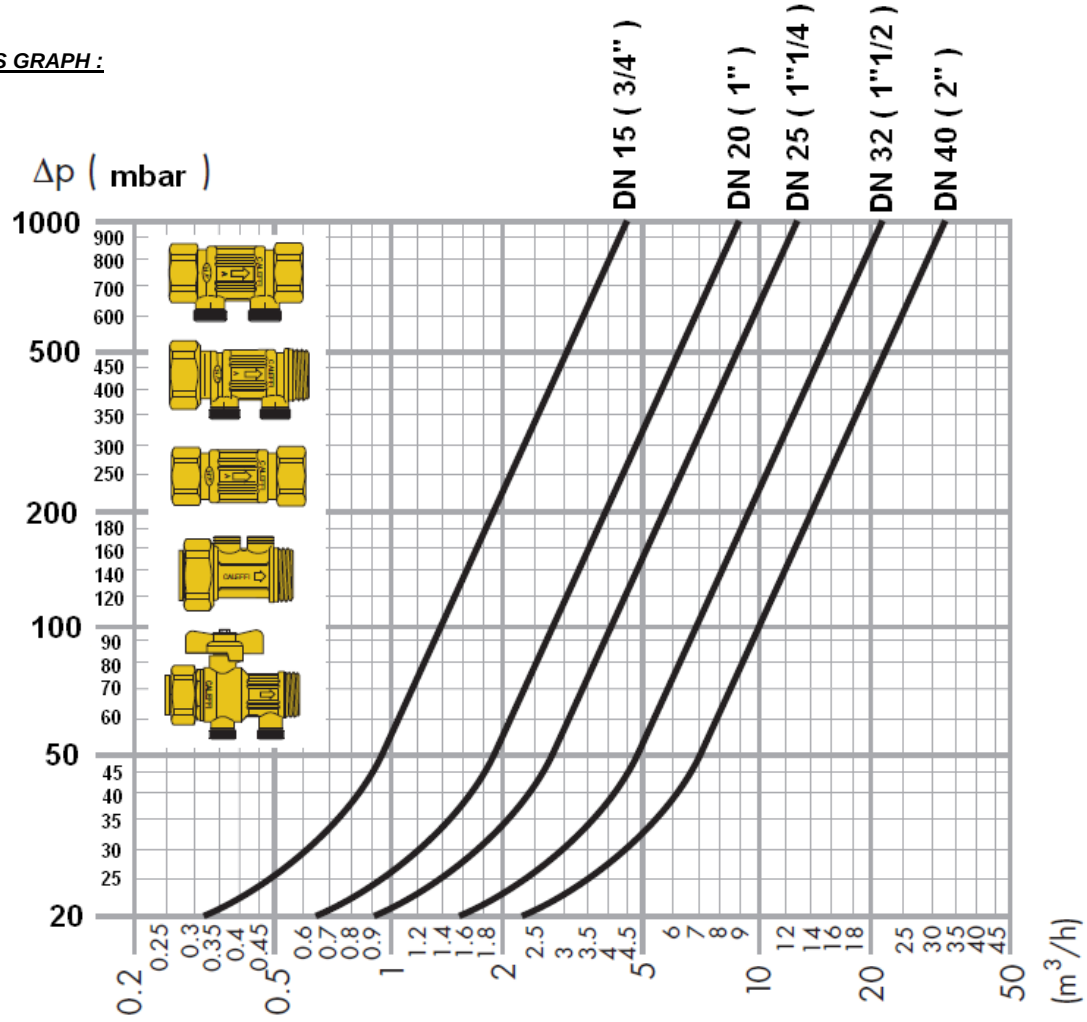

NO POLLUTION CHECK VALVE PN10

WORKING :

Operating principle

The anti-pollution check valve consists of a valve body (1), a check valve (2) and, if necessary, one or more inspection points (3) for operation checking and system draining procedures. The check valve (2) borders two different zones: one upstream or at the inlet (A) and one downstream or at the outlet (B).

Correct conditions of flow

In correct flow conditions, the check valve (2) opens automatically when the pressure in the flow direction upstream (A) is greater than the downstream value (B).

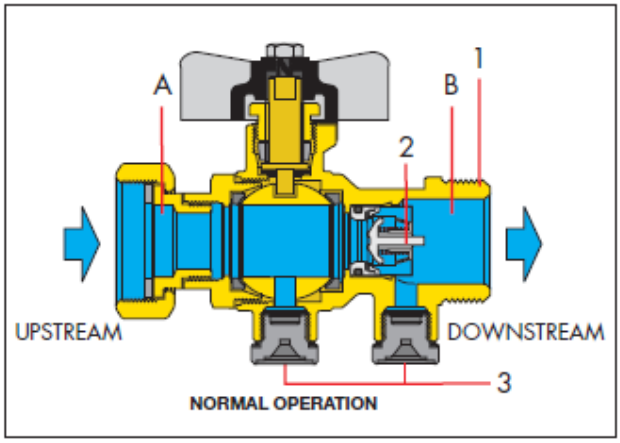

No flow conditions

The check valve (2) closes in advance under the action of the force exerted by the spring when the pressure downstream (B) tends to equal the value upstream (A), after the flow has stopped.

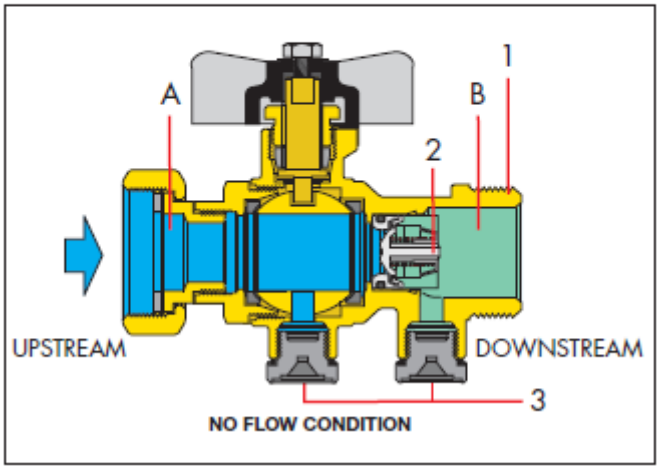

Upstream pressure loss

The check valve (2) remains closed, preventing water which has already been sent to the user from flowing back towards the public network.

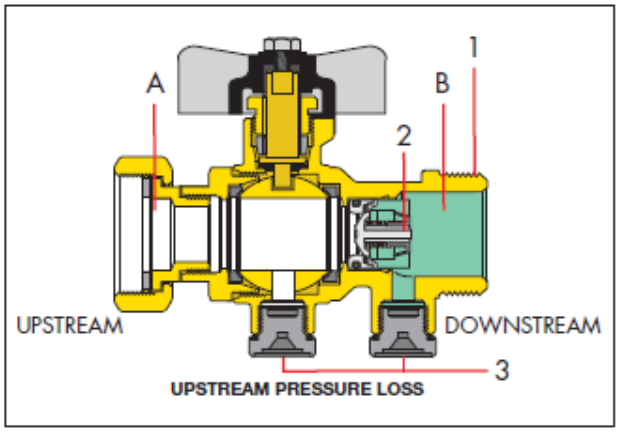

Downstream pressure increase

If the pressure in the downstream zone (B) increases until it exceeds the upstream pressure value (A), the check valve (2) remains closed, thus preventing water that has already been sent to the user from flowing back towards the public network.

Information provided as an indication and subject to possible modification

NO POLLUTION CHECK VALVE PN10

OPENING PRESSURE :

- Opening pressure : 5 mbar

RANGE :

- Free nut BSP cylindrical – male BSP threaded with 2 Hostaform caps DN1/4“, from DN 3/4“ to DN 2“ **Ref.340**
- Free nut BSP cylindrical – male BSP threaded with 2 brass caps DN1/4“, from DN 3/4“ to DN 1“ **Ref.343**
- Free nut BSP cylindrical – male BSP threaded with 2 no losable caps DN1/4“, from DN 3/4“ to DN 1“ **Ref.348**

MATERIALS :

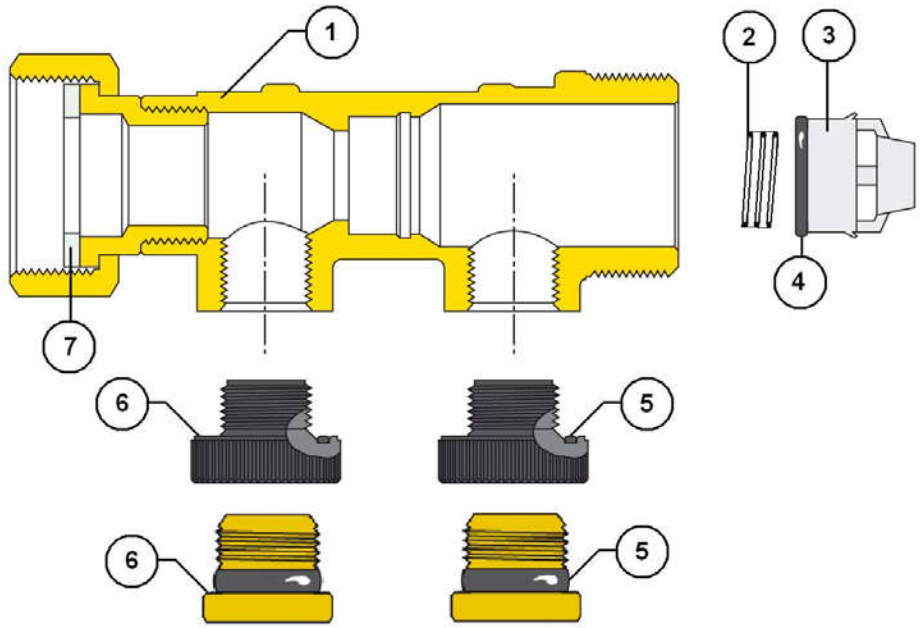

Item	Designation	Materials Ref. 340	Materials Ref. 343-348
1	Body	Brass CW 617 N according to EN 12165	Brass CW 617 N according to EN 12165
2	Spring	Stainless steel	Stainless steel
3	Throttle	POM	POM
4	Gasket	NBR	NBR
5	O ring	NBR	NBR*
6	Cap	PA66G30	Brass CW 614 N according to EN 12164
7	Free nut gasket	Fiber	Fiber

(*) : For the 348 type, there’s no O ring

Information provided as an indication and subject to possible modification

NO POLLUTION CHECK VALVE PN10

SIZE (in mm) :

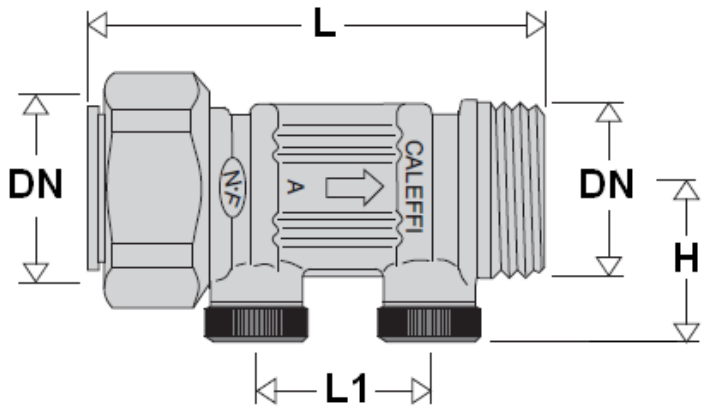

Ref.	DN	3/4"	1"	1"1/4	1"1/2	2"
340 / 343 / 348	L	78	81	128	153	169
	L1	32	32	32	32	40
	H	24	27.5	27.5	35	40
340	Weight (in Kg)	0.183	0.302	0.673	1	1.489
343	Weight (in Kg)	0.205	0.325	-	-	-
348	Weight (in Kg)	0.257	0.374	-	-	-

STANDARDS :

- Fabrication according to ISO 9001 : 2008
- DIRECTIVE 97/23/CE : Products excluded from directive (Article 1. § 3.2)
- French water agreement **A.C.S. N° 14 ACC LY 328**
- Designing according to EN 13959
- Threaded male and female BSP cylindrical ends according to ISO 228-1

ADVICE : Our opinion and our advice are not guaranteed and SFERACO shall not be liable for the consequences of damages.
The customer must check the right choice of the products with the real service conditions.

NO POLLUTION CHECK VALVE PN10

Backflow

Drinking water supplied by the public network may suffer from hazardous pollution caused mainly by contaminated fluids from plumbing systems flowing back directly into the public network.
This phenomenon, called "backflow", occurs when:

a) the pressure in the public network is lower than that in the plumbing circuit receiving the supply (back siphoning). This situation may occur when a pipe is broken in the public system or when other consumer demand on the public network is very heavy.

b) the pressure in the plumbing circuit receiving the supply rises (back pressure) due, for example, to water being pumped from a well.



Risk assessment

Given the potential dangers of the phenomenon and the requirements of current regulations, the risk of pollution caused by backflow must be assessed on the basis of the type of system and the characteristics of the fluid that flows inside it. A suitable backflow prevention device must be selected on the basis of the assessment performed by the system designer and the public network supplier. The device must be located along the supply line at the points at risk of backflow which would be hazardous to human health.

The protection can be provided by fitting a check valve at critical points in the circuit, at the inlet from the public network or in the internal plumbing system. This will prevent the backflow of polluted water in all systems for which direct connection to the public or an internal network is considered hazardous.

Application of the EA type anti-pollution check valve – with reference to European standard EN 1717 and EN 13959

Proper use of the EA type anti-pollution check valve is regulated by the new European standards relating to the prevention of pollution caused by backflow.
The reference standard is EN 1717: 2000 *"Protection against pollution of drinking water in hydraulic systems and general requirements for the devices used to prevent pollution caused by backflow"*.
In this standard, the water in the systems is classified according to the level of risk it represents for human health.

Category 1:
Water suitable for human consumption supplied by the water supplier.

Category 2:
Fluid that does not represent a health hazard, as in number 1, the quality of which has been compromised due to changes in temperature, taste, smell or appearance.

Category 3:
Fluid that represents a slight health risk due to the presence of one or more harmful substances.

Category 4:
Fluid that represents a health hazard due to the presence of one or more "toxic" or "highly toxic" substances, or one or more radioactive, mutagenic or carcinogenic substances.

Category 5:
Fluid that represents a severe health hazard due to the presence of microbiological or viral elements.

According to this classification, suitable backflow prevention devices must be fitted in water distribution plant systems.
EA type anti-pollution check valves can be used to offer protection against the risk of water contamination up to category 2.
For category 3 water, it is necessary to use a CA type backflow preventer.

The table below, called the "Protection matrix", associates the various types of system with the relative fluid categories and has been created based on the indications provided in the European regulations.

The new European standard EN 13959 – *"Anti-pollution check valves from DN 6 to DN 250. Family E, type A, B, C and D."* defines the functional, dimensional and mechanical requirements of anti-pollution check valves.

Protection matrix		
Type of system	**Cat. of fluid**	
	2	3
General		
Hot and cold water mixing devices in domestic water systems	*	
Water cooling devices for air conditioning units, without additives	*	
Sterilisers for packaged or disinfected materials		*
Water in primary domestic heating system circuits, without additives		*
Domestic, residential or commercial gardens		
Hand-held fertiliser sprayers for use in domestic gardens		*
Watering systems, without fertilisers or insecticides, with sprinkler fixed to the ground at a depth of not more than 150 mm		*
Water softeners		
Domestic water softeners regenerated with common salt	*	
Commercial water softeners (only regenerated with common salt)		*
Commercial applications		
Automatic dispensers **with** injection of ingredients or CO_2		*
Automatic dispensers **without** injection of ingredients or CO_2	*	
Machines to wash out drink distribution pipes in restaurants		*
Hairdresser rinsing systems	*	
Medicine		
X-ray machine cooling systems	*	
Food applications		
Ice-making machines	*	
Large kitchen machines with automatic filling system	*	
Household applications		
Water in sinks, baths and showers	*	
Domestic dishwashers and washing machines		*
Flexible pipes with controlled flow spray nozzles or stop cock		*
Domestic dialysis machines		*

Information provided as an indication and subject to possible modification

NO POLLUTION CHECK VALVE PN10

INSTALLATION :

Before installation, make sure that the device is suitable for protecting the supply system, in relation to the type of fluid used in the system.

The controllable check valve should be installed after a shut-off valve, upstream.

The unit should be installed in an accessible zone.

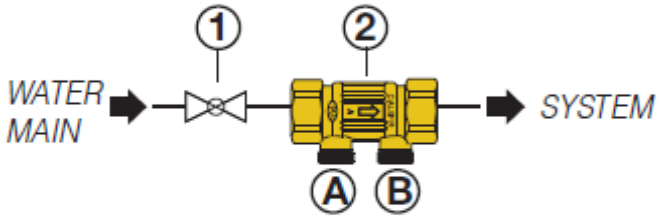

1	Shut-off valve upstream
2	Controllable check valve
A - B	Inspection points

Before installing the check valve it will be necessary to clean the piping with a high-capacity jet of water. Poor cleaning of the system can easily impair the operation of the device.

Inspection and operation checking procedure

The inspection and operation checking procedures should be carried out at least once a year.

1) Check whether the installation standards still require the application of the same device for the type of fluid used in the system.
2) Make sure that the hazard level of the fluid inside the system has not altered over time.
3) Check that there are no leaks or areas of corrosion or deterioration.
4) Perform the check valve seal operation checking procedure; when the water mains system pressure (and therefore the pressure upstream of the check valve) drops, the valve should close and prevent the water in the system from flowing back into the mains supply:
   - **a.** in order to maintain the system pressure in the absence of flow, close all the shut-off valves downstream of the valve and the inspection points for the same check valve.
   - **b.** close the shut-off valve upstream (1) and open the inspection point (A) of the check valve.
     The flow should stop after the part of piping, which has been cut off, is emptied.
   - **c.** if this is not the case, check the seal of the shut-off valve upstream (1) and, if the flow through the inspection point (A) continues, replace the check valve.
   - **d.** the inspection point (B) (where present) may be used to empty the system.

Information provided as an indication and subject to possible modification

NO POLLUTION CHECK VALVE PN10

INSTALLATION INSTRUCTIONS

GENERAL GUIDELINES :

- Ensure that the check valves to be used are appropriate for the conditions of the installation (type of fluid,pressure and temperature).
- Be sure to have enough valves to be able to isolate the sections of piping as well as the appropriate equipment for maintenance and repair.
- Ensure that the valves to be installed are of correct strenght to be able to support the capacity of their usage.

INSTALLATION INSTRUCTIONS :

- **Before installing the check valves, clean and remove any objects from the pipes** (in particular bits of sealing and metal) which could obstruct and block the valves.

- **Ensure that both connecting pipes either side of the check valve (upstream and downstream) are aligned (if they're not,the valves may not work correctly).**

- **Make sure that the two sections of the pipe (upstream and downstream) match, the check valve unit will not absorb any gaps.Any distortions in the pipes may affect the thightness of the connection,the working of the check valve and can even cause a rupture.**To be sure,place the kit in position to ensure the assembling will work.

- Before starting the fitting, ensure that the threads and tapping are clean.

- **If sections of piping do not have their final support in place,they should be temporarily fixed.This is to avoid unnecessary strain on the check valve.**
- The theoretical lenghts given by ISO/R7 for the tapping are typically longer than required,the lenght of the thread should be limited, and **check that the end of the tube does not press right up to the head of the thread.**
- For the sealing assembly check valve piping, it is essential to use products that are compatible with the requirements of the French water agreement ACS : **plumbers hemp proscribed**.
- If mounting on an air conditioning with PER tubing and hoses,it is necessary to support the tubes and hoses with the fixing to avoid strain on the check valve.
- When screwing the check valve, ensure that you only rotate on screwed side by the 6 ended side.Use an open ended spanner or an adjustable spanner and not a monkey wrench.
- **Never use a vice to tighten the fixings of the check valve.**
- Do not over tighten the check valve.Do not block with any extensions as it may cause a rupture or weakening of the casing**.**
- **In general,for all check valves used in buildings and heating,do not tighten above a torque of 30 Nm.**
- If there is a direction changing or if there's another material, it's better to take away the check valve so that it is outside the turbulence area (**between 3 and 5 times the ND before and after**).

After a pump please refer to norm NF CR 13932 to install the check valve.

Information provided as an indication and subject to possible modification