P.O. Box 14460
St. Louis, MO 63178-4460
114 Old State Road
Ellisville, MO 63021
Phone: (636) 527-3877

Date: February 5, 2009

To: S505 Customers

Subject: S505 Product Change Notification

To continuously improve our products and processes, Cooper Bussmann has made some modifications to select ratings within the S505 fuse line.

Over the next couple of months there will be a transition to the new design. There will be no changes to voltage ratings, interrupting ratings or max/min opening times. Changes in time-current characteristics are minimal. A new datasheet reflecting these changes is now available online at www.cooperbussmann.com/datasheets/elx.

New material declaration and engineering documents are available upon request.

Fuse dimensions remain the same for all part numbers without axial leads. For fuses with axial leads (part numbers containing “-V”), some ratings will be fitted with larger diameter leads. Lead diameter for S505-V-4-R (all prefixes), and S505-V-5-R (all prefixes) has increased from 0.65mm to 0.81mm.

Thank you for your business and your cooperation with this transition.

Michael Guo
Product Manager, Electronic Circuit Protection

For Latest Data On The S505 Series, See Data Sheet 2037

COOPER Bussmann

5mm x 20mm Fuses

S505 Series, Time Delay, Ceramic Tube

Description

- Time delay, high breaking capacity
- Optional axial leads available
- 5mm x 20mm physical size
- Ceramic tube, nickel plated brass endcap construction
- Designed to IEC 60127-2 (1A-12A)

RoHS 2002/95/EC

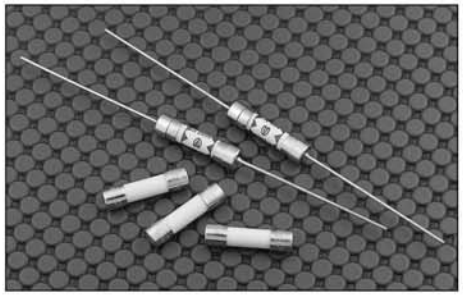

ELECTRICAL CHARACTERISTICS								
	1.5 In	2.1 In	2.75 In		4 In		10 In	
In	min	max	min	max	min	max	min	max
<1A	60 min	30 min	250 ms	80 sec	50 ms	5 sec	5 ms	55 ms
1A-3.15A	60 min	30 min	1 sec	80 sec	95 ms	5 sec	10 ms	100 ms
4A-10A	60 min	30 min	1 sec	80 sec	150 ms	5 sec	20 ms	100 ms
12.5A	--	30 min	1 sec	80 sec	150 ms	5 sec	20 ms	100 ms

Agency Information

- UL Recognized Card: (500mA-12A) Guide JDYX2, File E19180
- CSA Component Acceptance: File 53787, 500mA-10A
- SEMKO Approval, 500mA-10A
- VDE Approval, 500mA-10A
- BSI Approval, 500mA-10A
- IMQ Approval, 500mA-10A
- CCC Approval, 500mA-6.3A

Ordering

- Specify packaging, product, and option code
- For -R option, drop mA or A from product code (i.e. S505-3-R)

Dimensions

Drawing Not to Scale

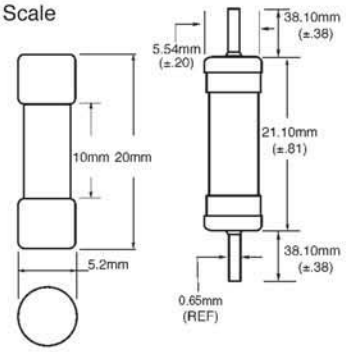

- Ratings above 6.3A have a 0.8mm diameter lead
- With TR2 packaging code, lead wire length is 19.05mm

SPECIFICATIONS					
Product Code	Voltage Rating AC	Interrupting Rating at Rated Voltage (50Hz) AC	Typical DC Cold Resistance (ohms)*	Typical Melting I^2t (A^2Sec) AC†	Typical Voltage Drop (mV)‡
S505-500mA	250V	1500A	0.507	-	295
S505-800mA	250V	1500A	0.237	-	189
S505-1A	250V	1500A	0.138	0.74	170
S505-1.25A	250V	1500A	0.089	1.6	150
S505-1.6A	250V	1500A	0.060	3.5	130
S505-2A	250V	1500A	0.041	7.6	110
S505-2.5A	250V	1500A	0.030	14	100
S505-3.15A	250V	1500A	0.021	27	90
S505-4A	250V	1500A	0.015	52	85
S505-5A	250V	1500A	0.011	98	80
S505-6.3A	250V	1500A	0.008	197	75
S505-8A	250V	1500A	0.007	311	75
S505-10A	250V	1500A	0.006	397	72
S505-12A	250V	1000A	0.005	714x	77

* DC Cold Resistance (Measured at <10% of rated current)
† Typical Melting I^2t (I^2t was measured at listed interrupting rating and rated voltage)
‡ Typical Voltage Drop (Voltage drop was measured at 20°C ambient temperature at rated current)
x Typical Melting I2t was measured at 10 times the rated current under DC

For Latest Data On The S505 Series, See Data Sheet 2037

COOPER Bussmann

5mm x 20mm Fuses

S505 Series, Time Delay, Ceramic Tube

TIME CURRENT CURVE

Time-Current Characteristics–Total Clear

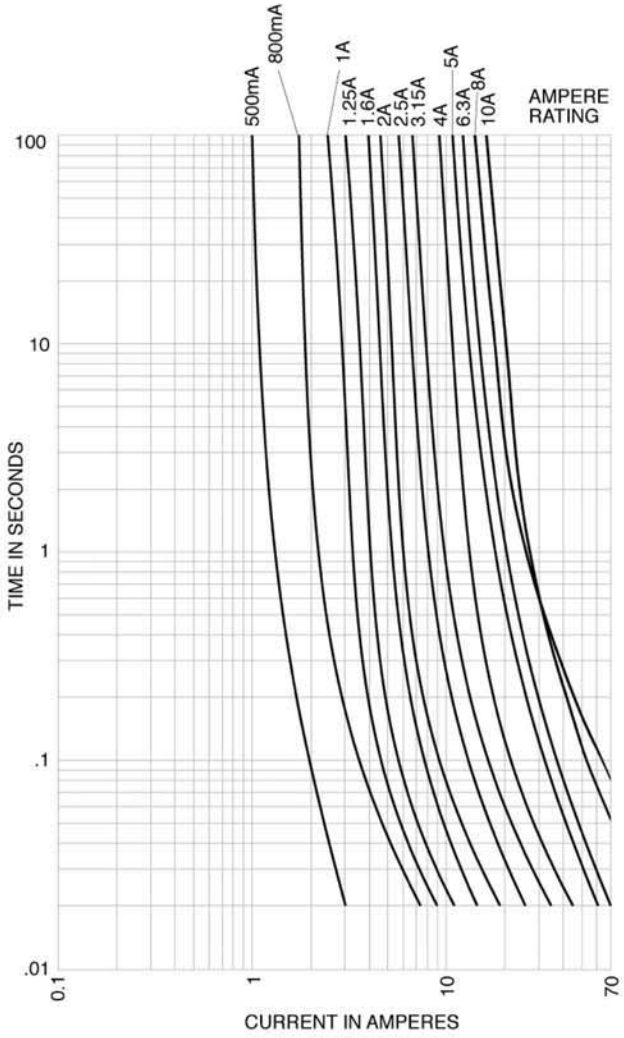

PACKAGING CODE	
Packaging Code	**Description**
BK	100 pieces of fuses packed into a cardboard carton
BK1	1,000 pieces of fuses packed into a poly bag
TR2	1,500 pieces of fuses packed into tape on a reel (19.05mm lead wire length)

OPTION CODE	
Option Code	**Description**
V	Axial leads - copper tinned wire with nickel plated brass overcaps
-R	RoHS compliant version

COOPER Bussmann

Visit us on the web at:
www.cooperbussmann.com

OC-2573 3/07

© Cooper Electronic Technologies 2007

North America

Cooper Electronic Technologies
1225 Broken Sound Parkway NW
Suite F
Boca Raton, FL 33487-3533
Tel: 1-561-998-4100
Fax: 1-561-241-6640
Toll Free: 1-888-414-2645

Cooper Bussmann
P.O. Box 14460
St. Louis, MO 63178-4460
Tel: 1-636-394-2877
Fax: 1-800-544-2570

Europe

Cooper Electronic Technologies
Cooper (UK) Limited
Burton-on-the-Wolds
Leicestershire • LE12 5TH UK
Tel: +44 (0) 1509 882 737
Fax: +44 (0) 1509 882 786

Cooper Electronic Technologies
Avda. Santa Eulalia, 290
08223
Terrassa, (Barcelona), Spain
Tel: +34 937 362 812
+34 937 362 813
Fax: +34 937 362 719

Asia Pacific

Cooper Electronic Technologies
1 Jalan Kilang Timor
#06-01 Pacific Tech Centre
Singapore 159303
Tel: +65 278 6151
Fax: +65 270 4160