S+S REGELTECHNIK

Differential pressure switches for air, with mounting angle, incl. connection set

The mechanical differential pressure switch / differential pressure monitor **PREM**ASREG® **DS 1** with metal angle is used for monitoring above-atmospheric, differential, and below-atmospheric pressures of air and gaseous, non-aggressive media in air ducts, ventilation intake or exhaust devices, as a flow monitor, as a pressure difference detector or pressure monitor for flow detection at electric heating registers, for monitoring V-belts and filters, as air pressure deficiency protection, for monitoring fans and air dampers, or as a limit value controller. The switchpoint is adjusted using the internal precision scale.

These instruments are factory-calibrated. The differential pressure switch DS 1 is supplied including connection set **ASD-06** (2 m connection hose, two pressure connection nipples, screws) and mounting angle **DS-MW-Z**.

DS 1
with mounting angle



Dimensional drawing **DS 1**

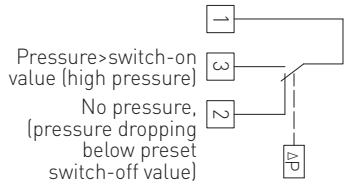

Dimensional drawing **DS 1**
with mounting angle
DS-MW-Z

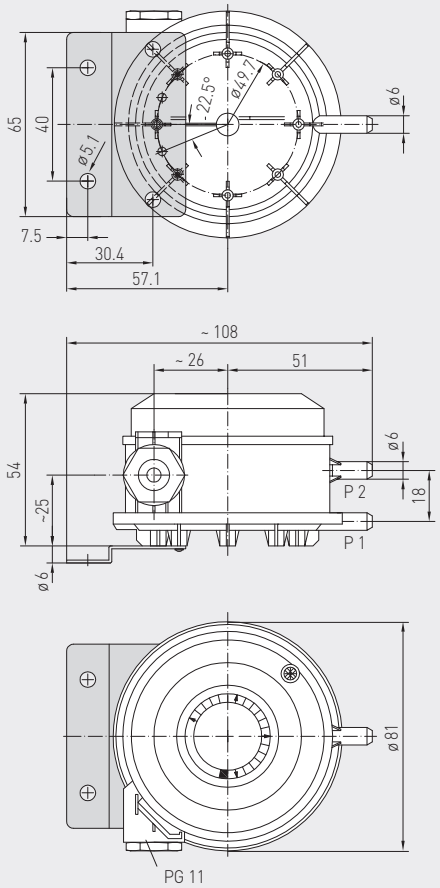

TECHNICAL DATA

Switching capacity: (Contact load)	5 (0.8) A, 250 V AC 4 (0.7) A, 30 V DC
Contact:	single-pole potential-free changeover contact, multi-layer contact, gold-plated (DDC compatible)
Pressure range:	see table, high adjustment accuracy due to individual laser-etched scale for each switch
Housing:	base: material PC (10 % GF), colour light grey (similar to RAL 7035), snap-on lid: material PC, transparent, cable gland PG 11 with strain relief
Temperature of medium:	–30...+85 °C
Membrane:	silicone, LSR (Liquid Silicon Rubber, tempered at +200 °C, non-outgassing, LABS-free, no emission of varnish-adhesion inhibiting substances), long-term stability of switching points due to trapezoidal bead membranes
Humidity:	< 90 % RH, non-precipitating air
Electrical connection:	0.14 - 1.5 mm², via terminal screws with torsion protection
Pressure connection:	with connection nozzles for pressure hose Ø 6 mm
Mounting:	**with metal angle DS-MW-Z** (included in the scope of delivery) (for other optional shapes, see table) Recommended mounting position: vertical (pressure connections downward) – factory setting; horizontal (cap up / down)
Protection class:	II (according to EN 60 730)
Protection type:	**IP 54** (according to EN 60529) with top cover
Standards:	CE conformity, low-voltage directive 2014 / 35 / EU
Tests:	DVGW (according to DIN 1854), VDE 0630, EN 61058, directive on gas devices 2009 / 142 / EU, CE 0085 A P 0918
FUNCTION	Contact 1 - 2 breaks when pressure / differential pressure rises to the preset value. Contact 1 - 3 closes when pressure / differential pressure drops and can be used as signal contact.
ACCESSORIES	
ASD-06	**Connection set** (nipple straight) – (included in the scope of delivery)
DS-MW-Z	**Mounting angle** (included in the scope of delivery)
DS-MW-L	**Mounting angle** (optional)
DS1-MW-U	**Mounting angle** (optional), combination bracket for vertical or horizontal mounting
WS-04	**Weather and sun protection hood**, 130 x 180 x 135 mm, aus stainless steel **V2A** (1.4301)

S+S REGELTECHNIK

Differential pressure switches for air, with mounting ring, including connection set

The mechanical differential pressure switch / differential pressure monitor **PREM**ASREG® **DS-2** with 4-hole plastic base ring is used for monitoring above-atmospheric, differential and below-atmospheric pressures of clean air and other gaseous, non-aggressive non-combustible media in air ducts, air intake or exhaust devices, as a pressure difference detector or pressure monitor for flow detection at electric heating registers, for monitoring V-belts and filters, as air pressure deficiency protection, for monitoring fans and air dampers, or as a limit value controller. The switchpoint is adjusted using the internal precision scale.

These instruments are factory-calibrated. The differential pressure switch DS 2 is supplied including connection set **ASD-06** (2 m connection hose, two pressure connection nipples, screws) and mounting ring **DS-MR-K**.

DS 2
with mounting ring



TECHNICAL DATA

Switching capacity: (Contact load)	5 (0.8) A, 250 V AC 4 (0.7) A, 30 V DC
Contact:	single-pole potential-free changeover contact, multi-layer contact, gold-plated (DDC compatible)
Pressure range:	see table, high adjustment accuracy due to individual laser-etched scale for each switch
Housing:	base: material PC (10 % GF), colour light grey (similar to RAL 7035), snap-on lid: material PC, transparent, cable gland PG 11 with strain relief
Temperature of medium:	–30...+85 °C
Membrane:	silicone, LSR (Liquid Silicon Rubber, tempered at +200 °C, non-outgassing, LABS-free, no emission of varnish-adhesion inhibiting substances), long-term stability of switching points due to trapezoidal bead membranes
Humidity:	< 90 % RH, non-precipitating air
Electrical connection:	0.14 - 1.5 mm², via terminal screws with torsion protection
Pressure connection:	with connection nozzles for pressure hose Ø 6 mm
Mounting:	**by 4-hole base ring, plastic** (included in the scope of delivery), recommended mounting position: vertical (pressure connections downward) – factory setting, horizontal (cap up / down)
Protection class:	II (according to EN 60 730)
Protection type:	**IP 54** (according to EN 60529) with top cover
Standards:	CE conformity, low-voltage directive 2014 / 35 / EU
Tests:	DVGW (according to DIN 1854), VDE 0630, EN 61058, directive on gas devices 2009 / 142 / EU, CE 0085 A P 0918
FUNCTION	Contact 1 - 2 breaks when pressure / differential pressure rises to the preset value. Contact 1 - 3 closes when pressure / differential pressure drops and can be used as signal contact.
ACCESSORIES	
ASD-06	**Connection set** (nipple straight) – (included in the scope of delivery)
DS-MR-K	**Mounting ring** (included in the scope of delivery)
WS-04	**Weather and sun protection hood**, 130 x 180 x 135 mm, aus stainless steel **V2A** (1.4301)

Schematic diagram **DS 2**

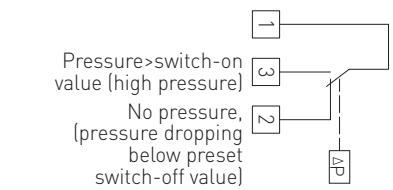

Dimensional drawing **DS 2**
with mounting ring
DS-MR-K

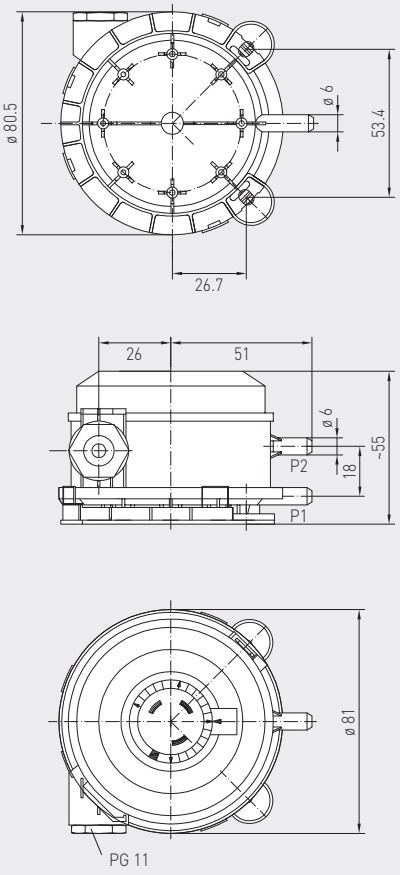

PREMASREG® DS 1
PREMASREG® DS 2

Differential pressure switches for air, including connection set

S+S REGELTECHNIK

Dimensional drawing **DS - MW-Z**
Mounting angle

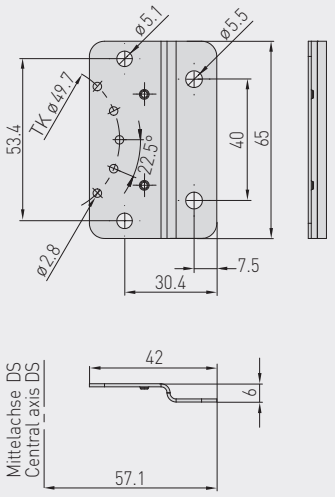

Dimensional drawing **DS - MW-L**
Mounting angle

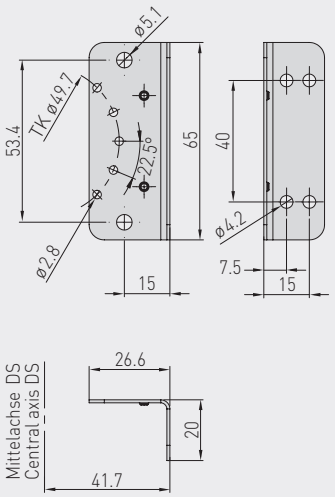

Dimensional drawing **DS - MW-U**
Mounting angle

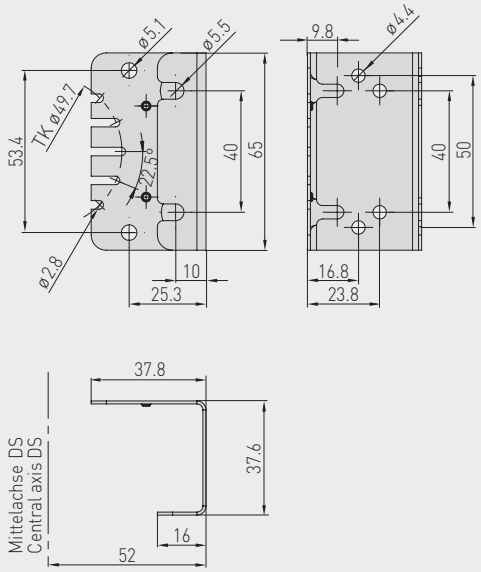

Mounting diagram **DS 1 / DS 2**

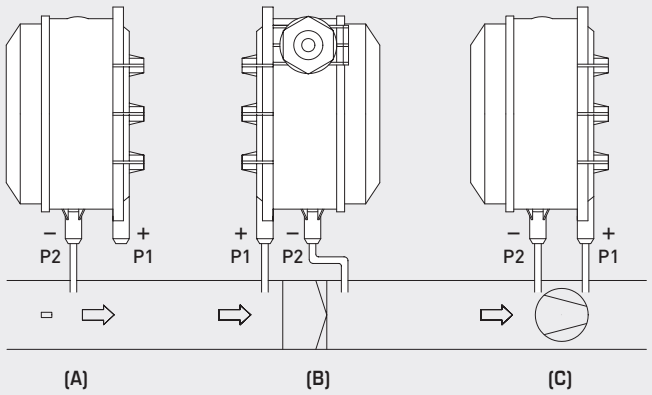

DS 1 / DS 2
Connection



TYPES OF MONITORING:

(A) Below-atmospheric pressure:
P1 (+) is not connected but open against atmosphere
P2 (–) connected to inside of duct

(B) Filter:
P1 (+) connected upstream of filter
P2 (–) connected downstream of filter

(C) Ventilator:
P1 (+) connected downstream of ventilator
P2 (–) connected upstream of ventilator

Pressure connections at the pressure switch are marked with P1 (+) for higher pressure and P2 (–) for lower pressure.

Conversion table for pressure values:

Unit =	bar	mbar	Pa	kPa	mWS
1 Pa	0.00001 bar	0.01 mbar	1 Pa	0.001 kPa	0.000101971 mWS
1 kPa	0.01 bar	10 mbar	1000 Pa	1 kPa	0.101971 mWS
1 bar	1 bar	1000 mbar	100000 Pa	100 kPa	10.1971 mWS
1 mbar	0.001 bar	1 mbar	100 Pa	0.1 kPa	0.0101971 mWS
1 mWS	0.0980665 bar	98.0665 mbar	9806.65 Pa	9.80665 kPa	1 mWS

Dimensional drawing **DS-MR-K** Mounting ring

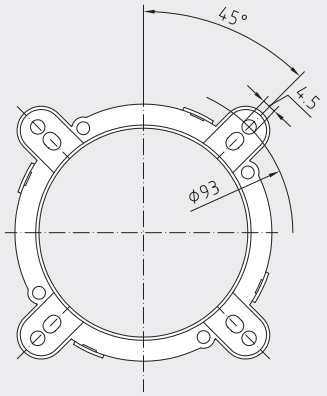

Dimensional drawing **ASD-06** Connection set

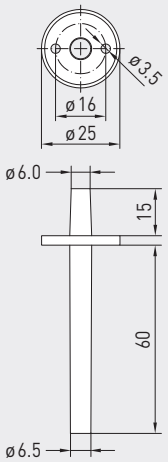

Dimensional drawing **ASD-07** Connection nipple

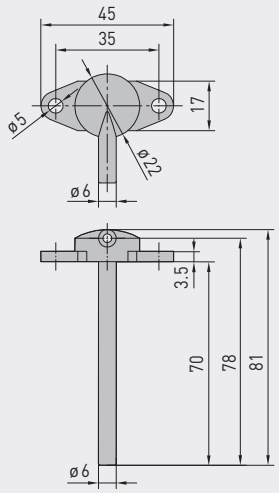

WS-04
Weather and sun protection hood (optional)



ASD-06
Connection set



ASD-07
Connection nipple



PREMASREG® DS 1 Differential pressure switches with mounting angle, *Premium*
PREMASREG® DS 2 Differential pressure switches with mounting ring, *Standard*

Type	Pressure range (adjustable)		Operating Difference approx.	Max. Pressure	Item No.	Price
DS 1 / WG02	*Premium*				**with mounting angle DS-MW-Z**	
DS-106	20… 300 Pa	(0.2…3.0 mbar)	0.1 mbar ± 15 %	5000 Pa (50 mbar)	1302-4011-0000-000	**54,80 €**
DS-106 A	50… 500 Pa	(0.5…5.0 mbar)	0.2 mbar ± 15 %	5000 Pa (50 mbar)	1302-4012-0000-000	**54,80 €**
DS-106 B	100…1000 Pa	(1.0…10.0 mbar)	0.4 mbar ± 15 %	5000 Pa (50 mbar)	1302-4013-0000-000	**54,80 €**
DS-106 C	500…2000 Pa	(5.0…20.0 mbar)	1.0 mbar ± 15 %	5000 Pa (50 mbar)	1302-4014-0000-000	**54,80 €**
DS-106 D	1000…5000 Pa	(10.0…50.0 mbar)	2.5 mbar ± 15 %	7500 Pa (75 mbar)	1302-4015-0000-000	**54,80 €**
DS 2 / WG03B	*Standard*				**with mounting ring DS-MR-K**	
DS-205 F	20… 300 Pa	(0.2…3.0 mbar)	0.1 mbar ± 15 %	5000 Pa (50 mbar)	1302-4026-0000-000	**36,16 €**
DS-205 B	50… 500 Pa	(0.5…5.0 mbar)	0.2 mbar ± 15 %	5000 Pa (50 mbar)	1302-4022-0000-000	**36,16 €**
DS-205 D	100…1000 Pa	(1.0…10.0 mbar)	0.4 mbar ± 15 %	5000 Pa (50 mbar)	1302-4027-0000-000	**36,16 €**
DS-205 E	500…2000 Pa	(5.0…20.0 mbar)	1.0 mbar ± 15 %	5000 Pa (50 mbar)	1302-4028-0000-000	**36,16 €**
ACCESSORIES						
DS-MW-Z	Sheet steel **mounting angle** in **Z**-form **(DS 1: included in the scope of delivery)**				7100-0063-0000-000	**13,76 €**
DS-MW-L	Sheet steel **mounting angle** in **L**-form				7100-0063-1000-000	**14,08 €**
DS-MW-U	Sheet steel **mounting angle** in **U**-form				7100-0060-9000-000	**17,31 €**
ASD-06	**Connection set (included in the scope of delivery),** consisting of 2 connection nipples (straight) made of ABS, 2 m PVC hose (soft, UV-resistant) and 4 screws				7100-0060-3000-000	**7,87 €**
ASD-07	**2 connection nipples** (at 90 degree angle) made of plastic, ABS				7100-0060-7000-000	**7,87 €**
WS-04	**Weather and sun protection hood**, 130 x 180 x 135 mm, stainless steel **V2A** (1.4301)				7100-0040-7000-000	**38,61 €**
	For further information, see last chapter Accessories!					