Brand of NTN corporation

Technical data

USPF203

Bearing units



Sheet metal housing, radial insert ball bearing with socket set screws, single lip seal

KIT CONTENT

US.203.G2, PF203

VISUAL (S)

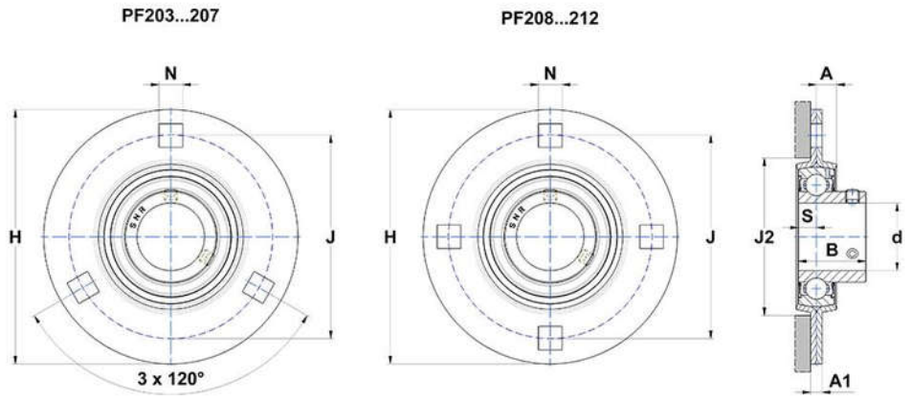

PRODUCT DEFINITION

Brand	SNR
A - Housing height	6,7 mm
A1 - Housing foot height / flange height	4 mm
A2 - Total height from mounting surface	18 mm
B - Width of Inner Ring	22 mm
d - Shaft diameter	17 mm

PRODUCT DEFINITION	
e - Distance mounting surface to bearing center	2 mm
H - Housing length, width or diameter	81 mm
J - Mounting holes distance	63,5 mm
N - Mounting hole dimension	7,1 mm
S - Distance front side/bearing centre	6 mm

PRODUCT PERFORMANCE	
C - Dynamic load rating	9550000 mN
C0 - Static load rating	4780000 mN
Operating temperature min.	253,15 °K
Operating temperature max.	373,15 °K

OTHER FEATURES	
Mass	0,24 kg
Recommended tightening torque for set screw	3.5 N-m