PRODUCT DETAILS
ARTICLE: 37413FR

WHEEL ZS 150X40/50 BB SWIVEL P60 +FR



Wheel series ZS

Castiron wheels with soft blue polurethane coating 87 Sh.A; available with shielded precision ball bearings.
Wheel fitted with ball bearings.

Castor series P60

P60 series, heavy duty pressed steel forks, swivel with hardened steel double races & 'water resistant' protections. Finish: zincplated.
Trailing foot brake - total stop.

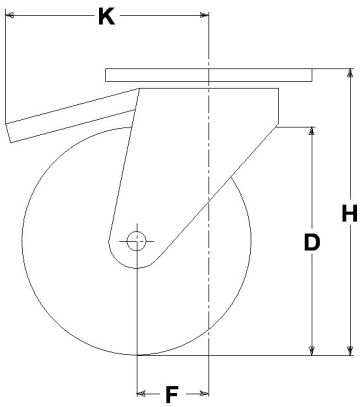

Technical data

Wheel diameter	D	150 mm
Tyre width	E	40,0 mm
Bearing seat diameter	s	47 mm
Bore diameter	d	20 mm
Outer faces bearings distance	V	44 mm
Weight article		4,000 kg
Hub width	L	50 mm
Overall height	H	194 mm
Top plate outer dimensions	AxB	135x110 mm
Bolt hole spacing	axb	96x56 mm
Bolt hole spacing	axb	105x75 mm
Bolt hole spacing	axb	105x80 mm
Fixing bolt diameter	g	M10
Offset	F	50 mm
Fork width	U	50 mm
Load Capacity		450 kg

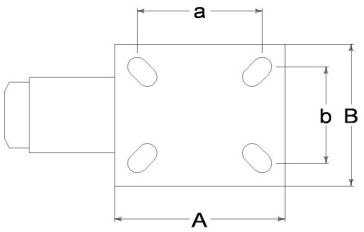

Related Articles

Spare part wheel: 37016CC
Basic version: 37413
Version with footguard: 37413PP
Version with trailing brake and footguard: 37413FRPP
Version with thread-guards: 37413PF

GENERAL INFORMATION / RECOMMENDATIONS AND WARNINGS
The cited text and the complete catalogue in their most up-dated versions are available in the OEM's website page www.lagspa.it/downloads. The dimensions, descriptions, specifications and illustrations herein are indicative and subject to variations without notice. The fact that products are illustrated herein does not necessarily imply they are available from stock nor does it place us under any obligation to supply them.
Tests carried out refer to the original products with original accessories: the replacement of one of the components with others of different manufacture might prevent the same results from being achieved and will automatically invalidate any guarantee. Please contact our technical service concerning any special application.