# E70455

## AS-Interface flat cable insulation displacement connector

FC Splitter ye ProcessL

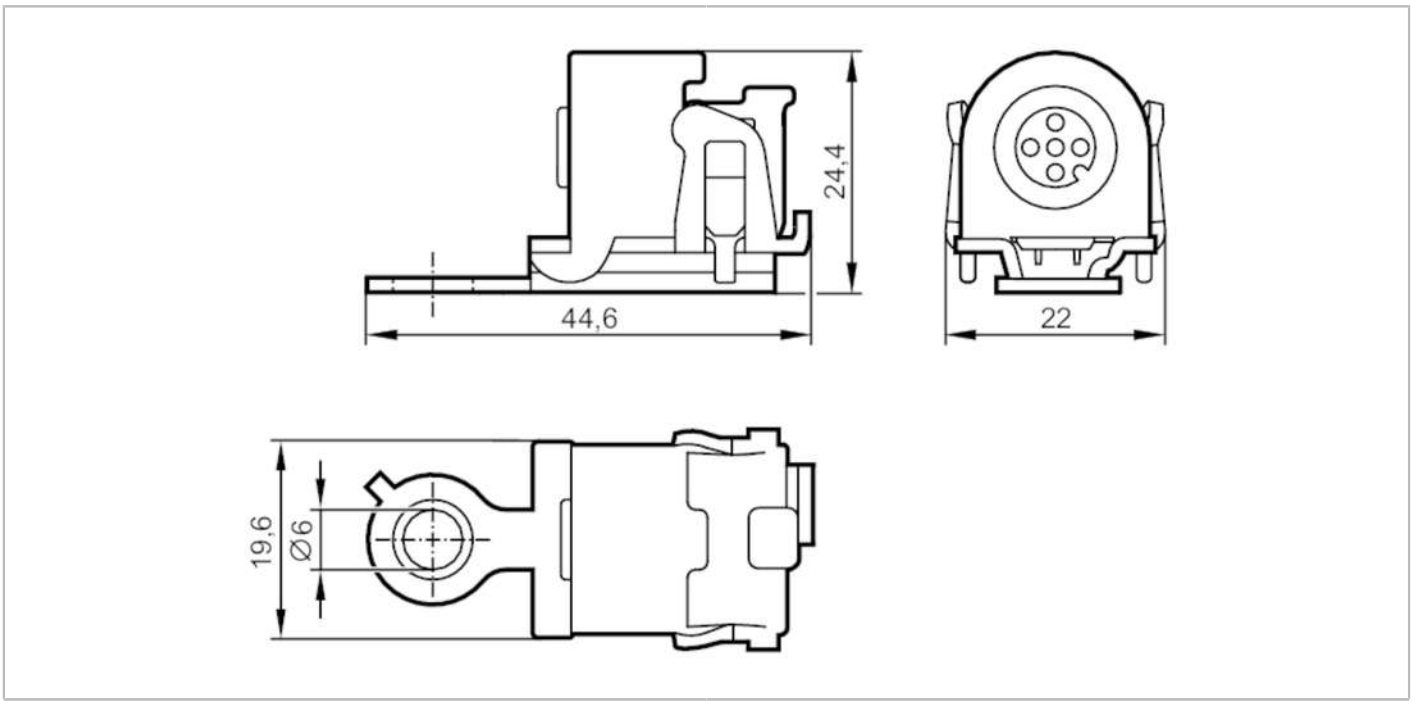


| | | |
|---|---|---|
| **Application** | | |
| Design | | AS-i |
| **Electrical data** | | |
| Operating voltage | [V] | 26.5...31.6 DC |
| **Outputs** | | |
| Max. current load outputs total | [A] | 2 |
| **Operating conditions** | | |
| Ambient temperature | [°C] | -30...80 |
| Protection | | IP 68; IP 69K |
| **Tests / approvals** | | |
| EMC | | EN 61000-6-2 |
| **Mechanical data** | | |
| Weight | [g] | 47 |
| Materials | | metal parts: stainless steel (316L/1.4404); rubber gasket for contact pins: FPM; O-ring: EPDM |
| **Accessories** | | |
| Accessories (optional) | | Torque wrench:, E70390 |
| **Remarks** | | |
| Pack quantity | | 1 pcs. |

# E70455

## AS-Interface flat cable insulation displacement connector

**FC Splitter ye ProcessL**

## Electrical connection




### Connection

1: AS-i +
2: n.c.
3: AS-i -
4: n.c.
5: n.c.

## Electrical connection - socket

Connector: 1 x M12; Tightening torque: ...0.8 Nm