Brand of NTN corporation

Technical data

UCP320

Bearing units



Grey cast housing, radial insert ball bearing with socket set screws,seal with slinger

KIT CONTENT

UC320G2, P320

VISUAL (S)

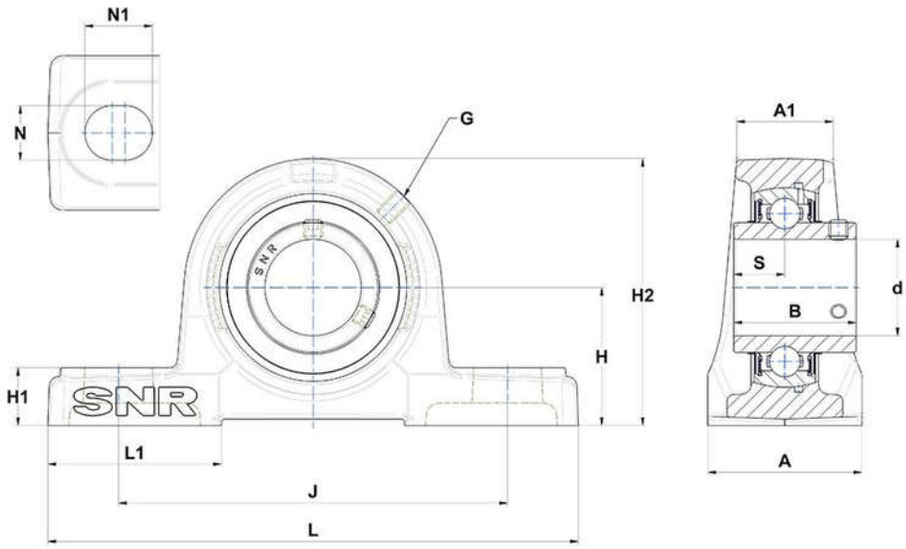

PRODUCT DEFINITION

Brand	SNR
A - Housing width	120 mm
A1 - Housing top width	81 mm
B - Width of Inner Ring	108 mm
d - Shaft diameter	100 mm
G - Grease fitting	M10x1

PRODUCT DEFINITION	
H - Distance mounting base to centerline spheric. seating diam.	140 mm
H1 - Housing foot height	50 mm
H2 - Housing height	275 mm
J - Mounting holes distance	380 mm
L - Housing length	490 mm
L1 - Housing foot length	130 mm
N - Mounting hole dimension	36 mm
N1 - Mounting hole length	50 mm
S - Distance front side/bearing centre	42 mm

PRODUCT PERFORMANCE	
C - Dynamic load rating	171600000 mN
C0 - Static load rating	140000000 mN
Operating temperature min.	253,15 °K
Operating temperature max.	373,15 °K

OTHER FEATURES	
Mass	37,9 kg
Recommended tightening torque for set screw	75 N-m