OVERALL ASSEMBLY DIMENSIONS:

EXTERNAL - 100 x 50 x 40

INTERNAL - 96.4 x 46.4 x 36.4

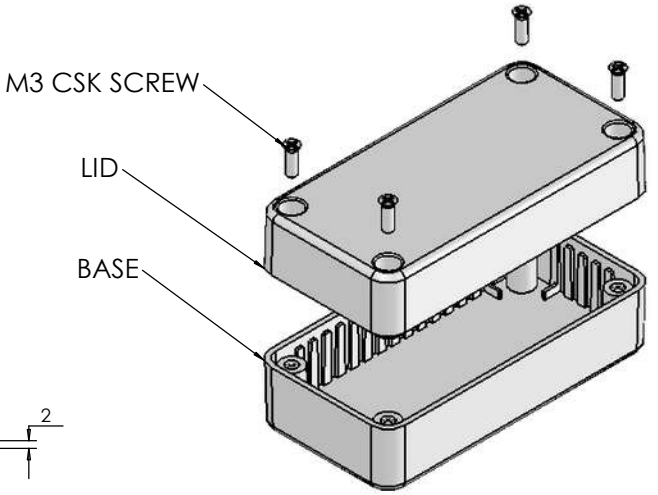

ISO VIEW

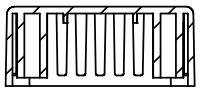

SECTION A-A

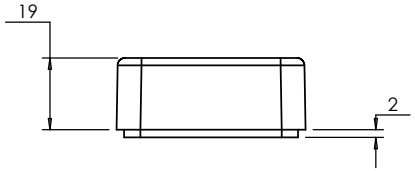

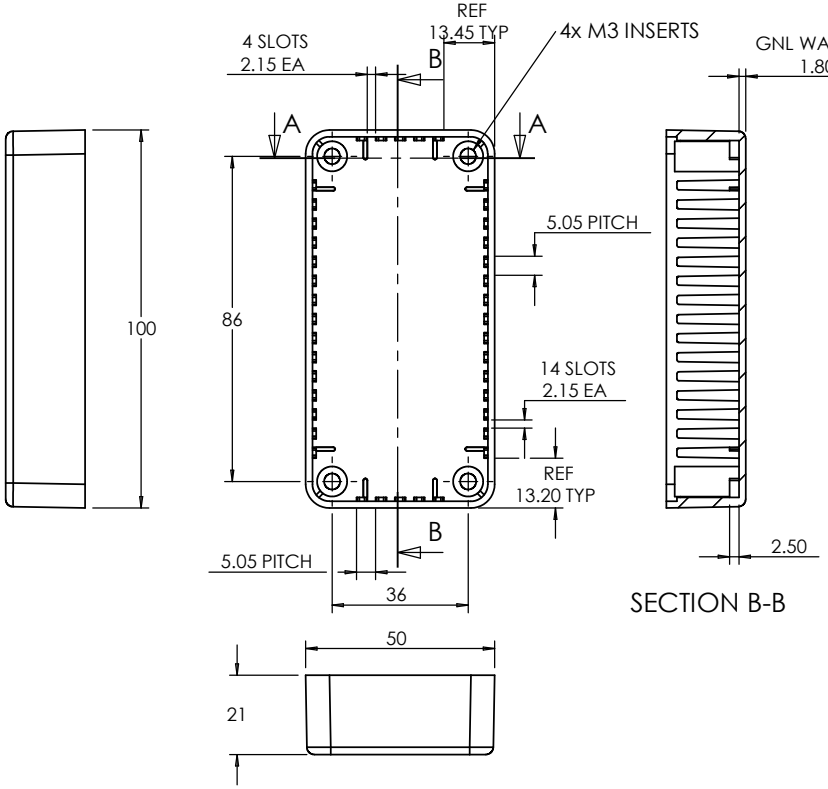

BASE

SECTION B-B

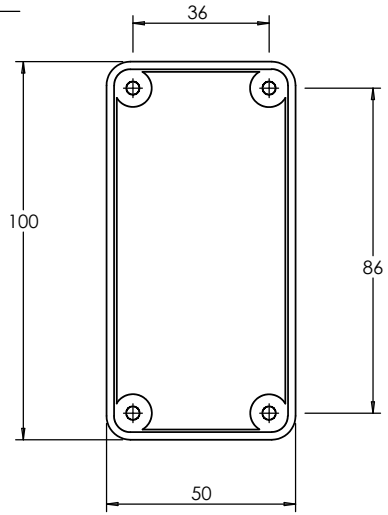

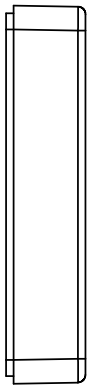

LID

JAMES CARTER RD, MILDENHALL, SUFFOLK. IP28 7DE TEL: 01638 716101 FAX: 01638 716554 EMAIL: SALES@BOSS-ENCLOSURES.CO.UK WEB: www.BOSS-ENCLOSURES.CO.UK				UNLESS OTHERWISE SPECIFIED: DIMENSIONS ARE IN MILLIMETERS	DO NOT SCALE DRAWING	REVISION. O
				FINISH. SMOOTH	TITLE: ASSEMBLY DRG FOR 2002/22	
	NAME	SIGNED	DATE	MATERIAL. ABS	DWG NO. 2002,22	A4
DRAWN	S.HARDINGE	SJH	03/10/05			
CHK'D	-	-	-	PROJECTION.	SCALE. 1 : 2	SHEET 1 OF 1