Small hinges

Square hinges with two offset leaves and removable pin - no holes

Removable pin.



Part number	Material	Finish	A	B	C	D	Weight (g)
50-7-3347	steel	raw	40	40	2	4	36
50-7-3348	steel	raw	50	50	2	6	64
50-7-3349	steel	raw	60	60	2	6	84
50-7-3350	steel	raw	70	70	2	6	112

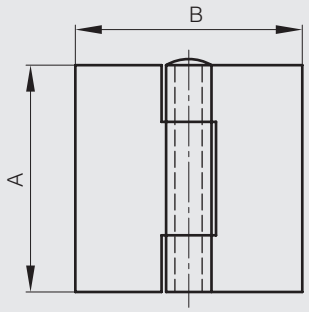

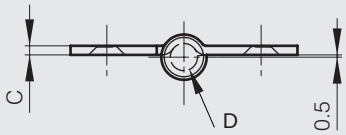

Square hinges with two offset leaves and removable pin - with 4 holes

Removable pin.



Part number	Material	Finish	A	B	C	D	F	G	S	Weight (g)
50-7-3580	steel	zinc plated	40	40	2	4	7	24	4.3	34
50-7-3581	steel	zinc plated	50	50	2	6	8	34	5.2	61
50-7-3582	steel	zinc plated	60	60	2	6	8	40	4.5	82
52-1-3608	304 stainless steel	raw	40	40	2	4	8	24	4	34
52-1-3610	304 stainless steel	raw	50	50	2	6	8	34	4.5	61
52-1-3612	304 stainless steel	raw	60	60	2	6	8	40	4.5	82

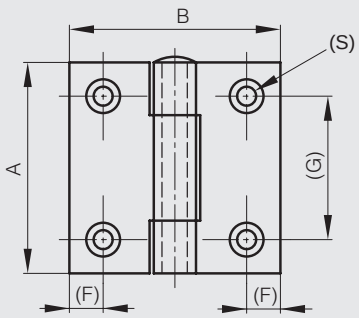

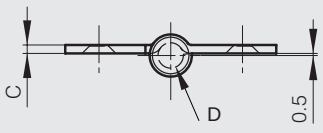

Square hinges with two offset leaves and removable pin - with 6 holes



Removable pin.

Part number	Material	Finish	A	B	C	D	F	G	H	S	Weight (g)
50-7-3583	steel	zinc plated	70	70	2	6	8	50	18	4	156
50-7-3584	steel	zinc plated	80	80	2.5	6	8	60	20.5	4	164
52-1-3614	304 stainless steel	raw	70	70	2	6	8	50	18	4.5	156
52-1-3616	304 stainless steel	raw	80	80	2.5	6	8	60	20.5	4.5	164

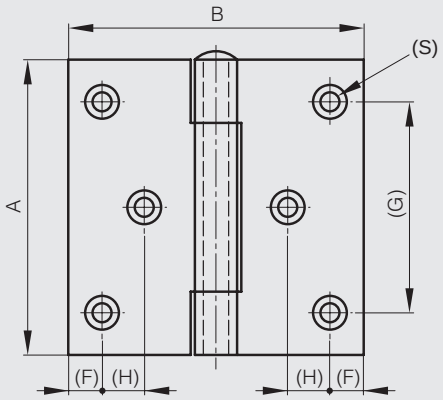

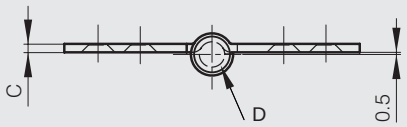

Square hinges with two offset leaves and riveted pin - with 4 holes



Riveted pin.

Part number	Material	Finish	A	B	C	D	F	G	S	Weight (g)
52-1-3609	304 stainless steel	raw	40	40	2	4	8	24	4	34
52-1-3611	304 stainless steel	raw	50	50	2	6	8	34	4.5	61
52-1-3613	304 stainless steel	raw	60	60	2	6	8	40	4.5	82
52-1-3872	316L stainless steel	raw	40	40	2	4	8	24	4	34
52-1-3709	316L stainless steel	raw	50	50	2	6	8	34	4.5	61
52-1-3873	316L stainless steel	raw	60	60	2	6	8	40	4.5	82

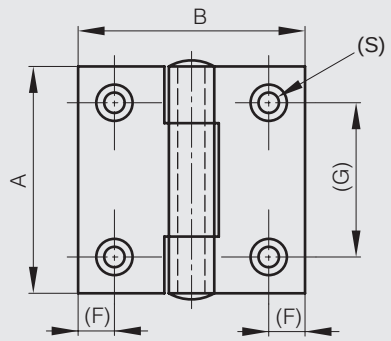

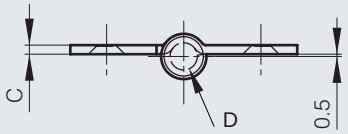

Small hinges

Square hinges with two offset leaves and riveted pin - with 6 holes



Riveted pin.

Part number	Material	Finish	A	B	C	D	F	G	H	S	Weight (g)
52-1-3615	304 stainless steel	raw	70	70	2	6	8	50	18	4.5	156
52-1-3617	304 stainless steel	raw	80	80	2.5	6	8	60	20.5	4.5	164

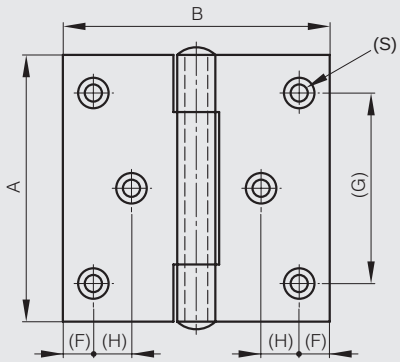

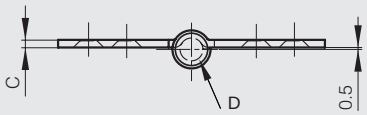

Square hinges with no offset leaf and riveted pin - no holes



Riveted pin.

Part number	Material	Finish	A	B	C	D	Weight (g)
50-1-3916	steel	raw	40	40	2	4	34
50-1-3917	steel	raw	50	50	2	6	61
50-1-3648	steel	raw	50	50	2.5	4.5	75
50-1-3918	steel	raw	60	60	2	6	82
50-1-3919	steel	raw	70	70	2	6	112
50-1-3920	steel	raw	80	80	2.5	6	168
50-1-3921	steel	raw	100	100	2.5	6	248
52-1-3679	304 stainless steel	raw	40	40	2	4	34
52-1-3694	304 stainless steel	raw	50	50	2	6	61
52-1-3695	304 stainless steel	raw	60	60	2	6	82
52-1-3864	304 stainless steel	raw	70	70	2	6	112
52-1-3865	304 stainless steel	raw	80	80	2.5	6	168
52-1-3866	304 stainless steel	raw	100	100	2.5	6	248
52-1-3869	316L stainless steel	raw	40	40	2	4	34
52-1-3870	316L stainless steel	raw	50	50	2	6	61
52-1-3871	316L stainless steel	raw	60	60	2	6	82

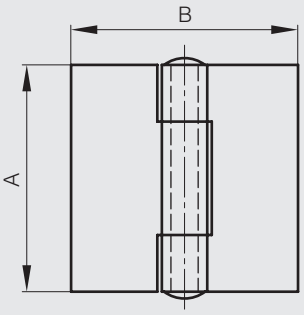

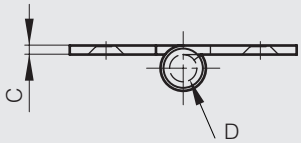

Square hinges with no offset leaf and riveted pin - with 4 holes



Riveted pin.

Part number	Material	Finish	A	B	C	D	F	G	S	Weight (g)
52-1-3861	304 stainless steel	raw	40	40	2	4	8	24	4	32
52-1-3862	304 stainless steel	raw	50	50	2	6	8	34	4.5	59
52-1-3863	304 stainless steel	raw	60	60	2	6	8	40	4.5	80
52-1-3874	316L stainless steel	raw	40	40	2	4	8	24	4	32
52-1-3710	316L stainless steel	raw	50	50	2	6	8	34	4.5	59
52-1-3875	316L stainless steel	raw	60	60	2	6	8	40	4.5	80

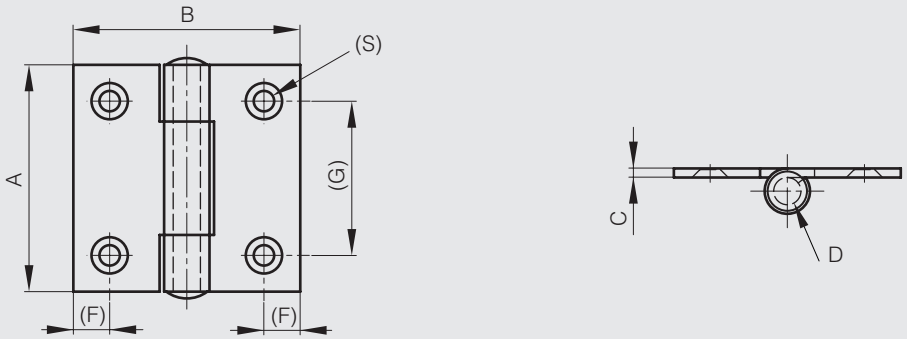

Square hinges with no offset leaf and riveted pin - with 6 holes



Riveted pin.

Part number	Material	Finish	A	B	C	D	F	G	H	S	Weight (g)
52-1-3867	304 stainless steel	raw	70	70	2	6	8	50	10	4.5	110
52-1-3868	304 stainless steel	raw	80	80	2.5	6	8	60	12.5	4.5	166

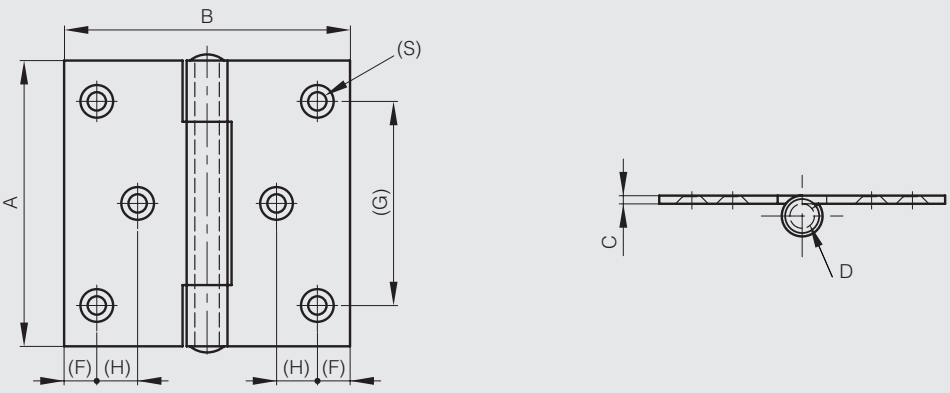

Small hinges

Hinge 30 x 30 mm

NEW!



Part number	Material	Finish	A	B	C	D	S	Weight (g)
52-1-4038	304 stainless steel	raw	30	30	0.8	2	3.3	8

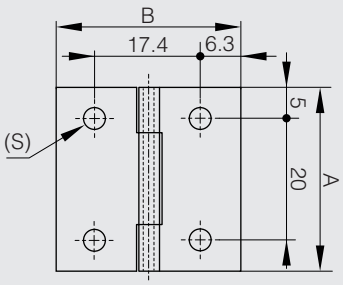

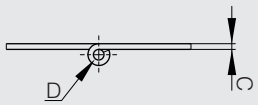

Hinge 50 x 30 mm

Drilled hinge with riveted pin.



Part number	Material	Finish	A	B	C	D	F	G	S	Weight (g)
52-1-3571	304 stainless steel	raw	50	30	1	3	6.5	35	3.5	16

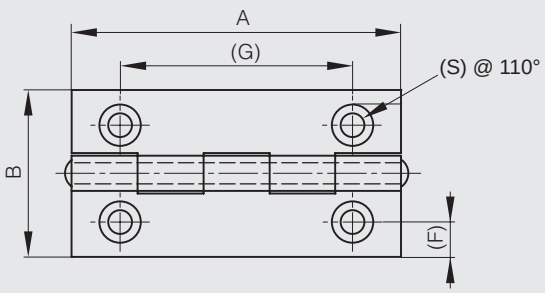

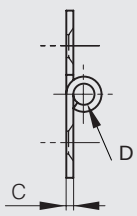

Small hinges

Hinges 50 x 40 mm

Available in 2 versions: with holes or countersunk holes.



Part number	Material	Finish	A	B	C	D	F	G	S	Note	Weight (g)
50-1-3526	steel	zinc plated	50	40	1.2	3	8.5	36	5	countersunk version	24
50-1-3525	steel	zinc plated	50	40	1.2	3	8.5	36	5	drilled	24
52-1-3592	304 stainless steel	raw	50	40	1.2	3	8.5	36	5	countersunk version	24
52-1-3607	304 stainless steel	raw	50	40	1.2	3	8.5	36	5	drilled	24

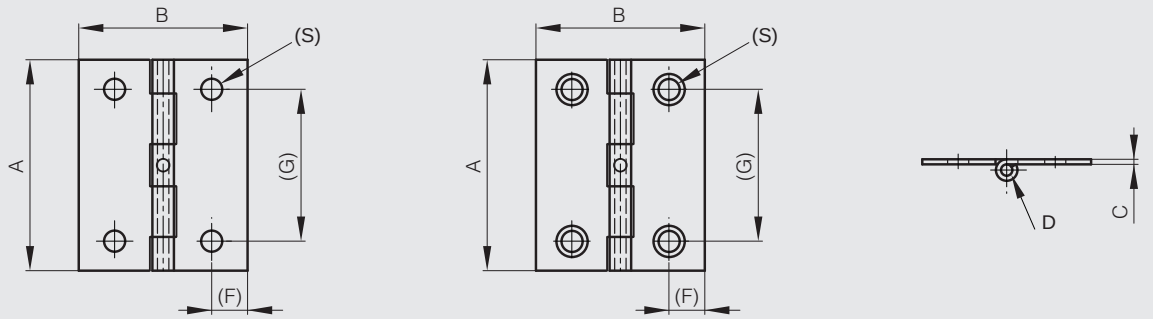

Hinges 60 x 35 mm

NEW!



Part number	Material	Finish	A	B	C	D	S	Note	Weight (g)
52-1-4009	304 stainless steel	raw	60	35	1	2	4	countersunk version	20
52-1-4051	304 stainless steel	raw	60	35	1	2	4	drilled	20

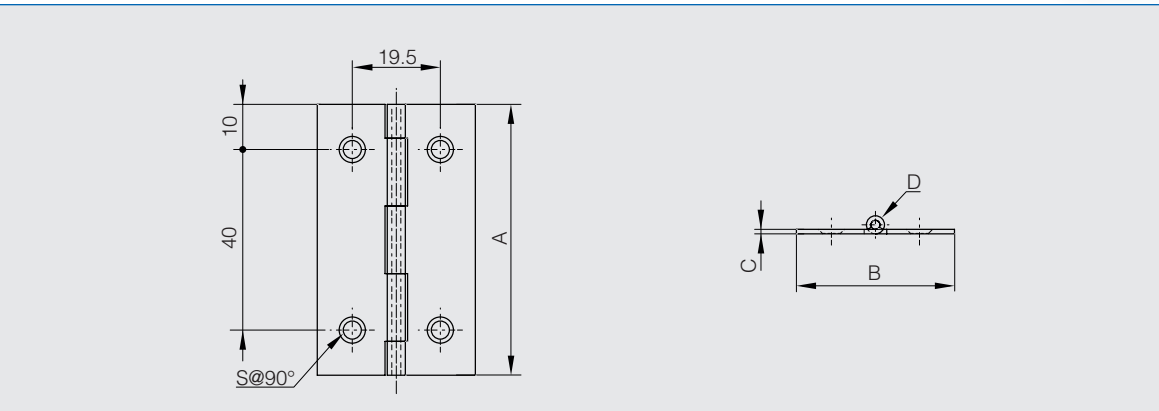

Small hinges

Hinge 75 x 40 mm



Part number	Material	Finish	A	B	C	D	E	F	G	Weight (g)
52-1-3990	304 stainless steel	raw	75	40	1.5	3	6	7.5	48	40

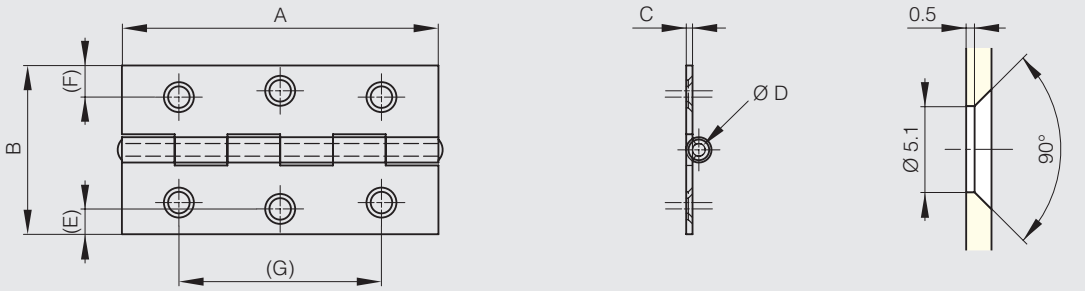

Hinge with nylon washers

Teflon plated pin in 430 stainless steel blocked with 2 punches.
4 nylon washers.



Part number	Material	Finish	A	B	C	D	E	F	G	S	Weight (g)
52-1-3790	304 stainless steel	raw	75	80	2	6	10.5	6.5	52	7.5	120

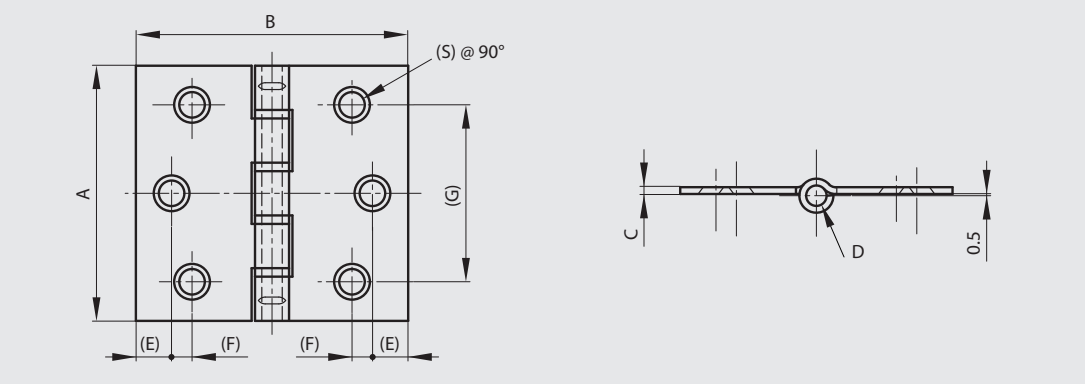

Small hinges

Small hinges with 4 knuckles



Only part number 50-7-3558 has a headed pin.

Part number	Material	Finish	A	B	C	D	F	G	S	Note	Weight (g)
50-7-3617	steel	raw	30	19	0.8	2.4	4	19	2	drilled	5.5
50-7-3618	steel	raw	30	19	0.8	2.4				undrilled	5.6
50-7-3549	steel	raw	35	22	0.8	2.4	4	22	3.5	drilled	7
50-7-3557	steel	raw	35	22	0.8	2.4				undrilled	7.5
50-7-3558	steel	raw	40	25	0.9	2.7				undrilled / headed pin	10.2
50-7-3550	steel	raw	40	25	0.9	2.7	5	27	3.5	drilled	10
50-7-3551	steel	raw	50.3	29.8	1	2.4	7.2	35.2	2.5	drilled	15
50-7-3559	steel	raw	50.3	29.8	1	2.4				undrilled	15.5

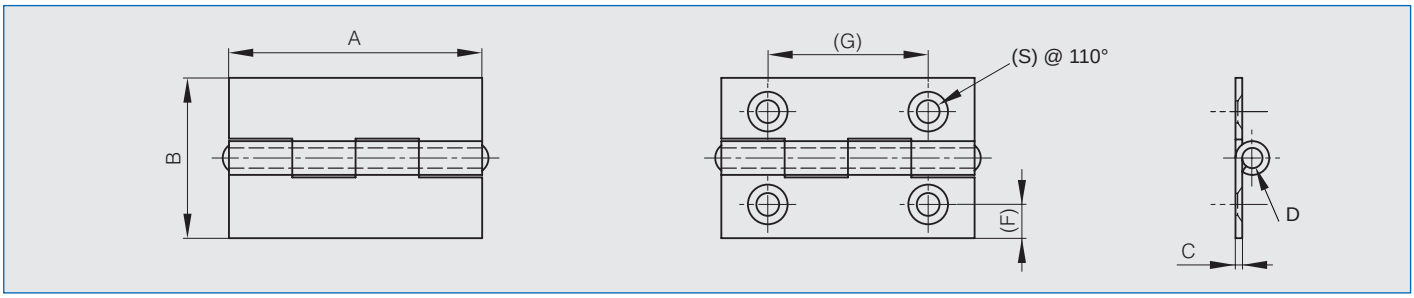

Small hinges with 6 knuckles



All hinges have headed pins except 50-7-3552, 50-7-3553, 50-7-3561.

Part number	Material	Finish	A	B	C	D	F	G	S	Note	Weight (g)
50-7-3552	steel	raw	60	35	1	3	8	44	2.5	drilled	22.5
50-7-3560	steel	raw	60	35	1	3				undrilled / headed pin	23
50-7-3553	steel	raw	70	41.5	1	3.5	8.7	52	3	drilled	39
50-7-3561	steel	raw	70	41.5	1	3.5				undrilled	40
50-7-3562	steel	raw	80	45	1.2	3.9				undrilled / headed pin	48
50-7-3554	steel	raw	80.5	45.4	1	3.5	9.6	59.3	4	drilled / headed pin	47
50-7-3556	steel	raw	100	50	1.5	4.9	10	77	4.5	drilled / headed pin	85
50-7-3564	steel	raw	100	50	1.5	4.9				undrilled / headed pin	86

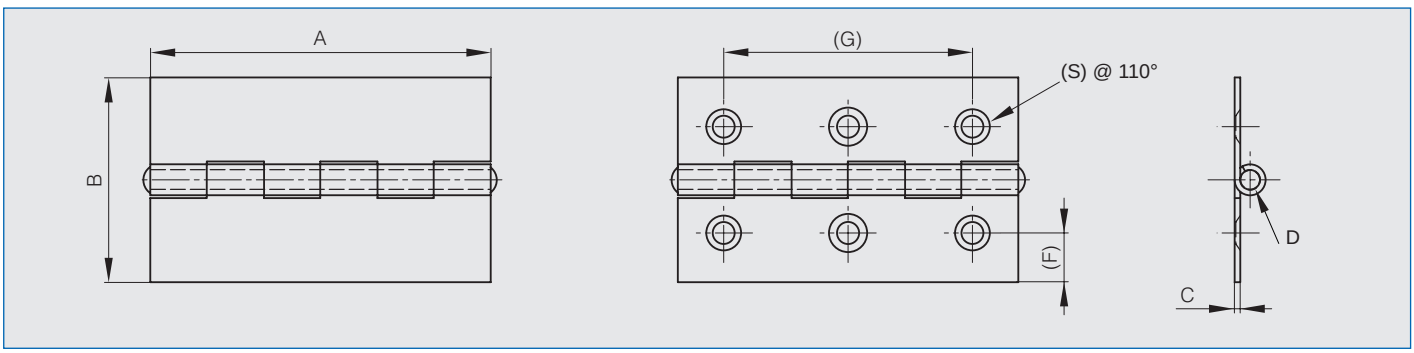

Small hinges

Hinge 100 x 84 mm

NEW!



304 stainless steel riveted pin.

Part number	Material	Finish	A	B	C	D	S	Weight (g)
50-1-4174	steel	zinc plated	100	84	3	6	5.5	250

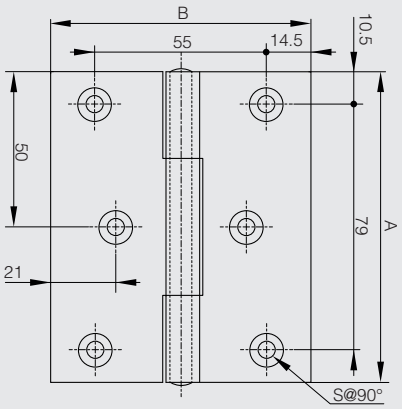

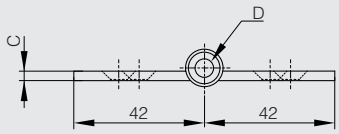

Brass hinges - 4 holes



304 stainless steel pin.

Part number	Material	Finish	A	B	C	D	E	F	G	S	Note	Weight (g)
72-7-3659	brass	raw	30	20	2	3	2.5	12.5	16.5	2.5	drilled	11.6
72-7-3660	brass	raw	30	30	2	3	2.5	19	17	2.5	drilled	15.8

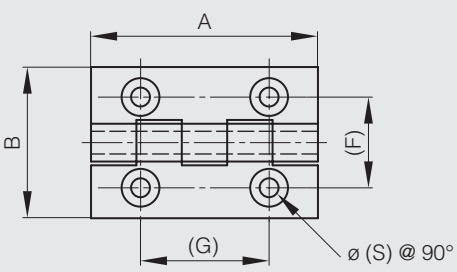

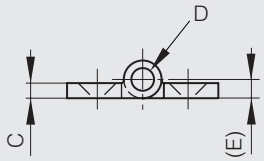

Brass hinges - 6 holes A



304 stainless steel pin.

Part number	Material	Finish	A	B	C	D	E	F	G	H	S	Weight (g)
72-7-3662	brass	raw	40	30	2	3	2.5	18	14		3	20.5
72-7-3663	brass	raw	40	35	2	3	2.5	21	14		3	24
72-7-3664	brass	raw	40	40	2	3	2.5	23	14		3	29
72-7-3665	brass	raw	50	30	2	3	2.5	17.5	17.5		3	26
72-7-3666	brass	raw	60	35	2	3	2.5	20	21.5	24	3.5	37
72-7-3667	brass	raw	60	40	2	3	2.25	21.5	21.5	26	3.5	43.5

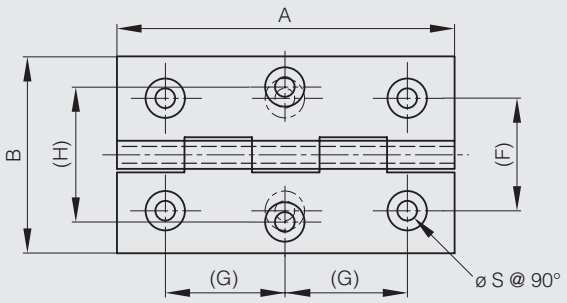

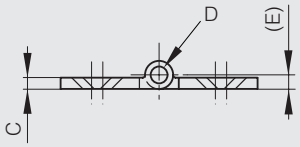

Brass hinges - 6 holes B



304 stainless steel pin.

Part number	Material	Finish	A	B	C	D	E	F	G	H	S	Weight (g)
72-7-3668	brass	raw	70	40	2	3	2.25	23	24	27	3.5	52
72-7-3669	brass	raw	70	50	2.5	3.5	3.25	25	24	37	3.5	79
72-7-3670	brass	raw	80	45	2.2	3	2.25	22.5	29	30.5	3.5	72
72-7-3671	brass	raw	80	60	3	4	3.5	28	28.5	45	4	125

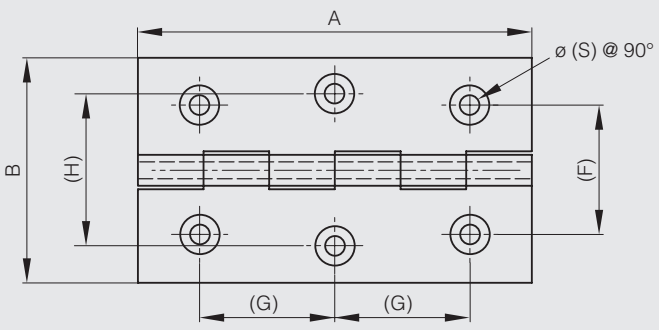

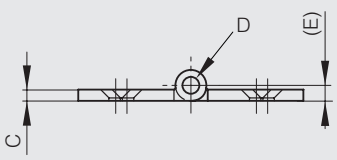

Small hinges

Hinge 20 x 65 mm

NEW!



Part number	Material	Finish	A	B	C	D	S	Weight (g)
52-1-4013	304 stainless steel	raw	20	65	1	2	4	11

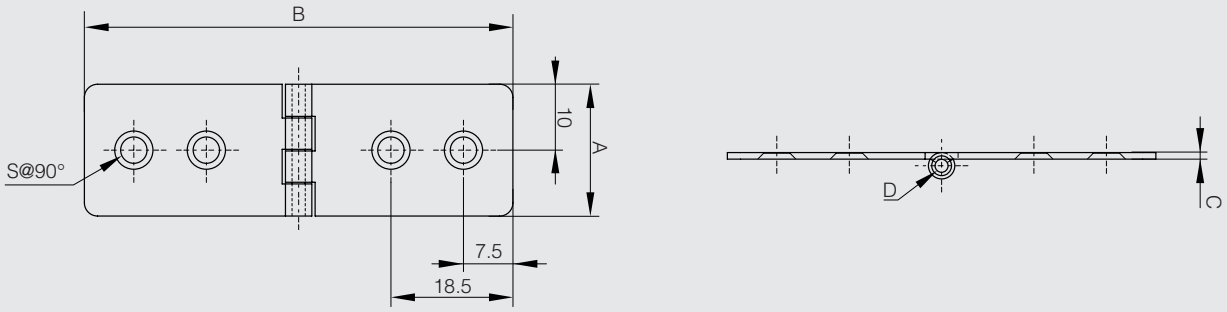

Hinges 20 x 77 mm and 22 x 120 mm



Part number	Material	Finish	A	B	C	D	E	F	S	Weight (g)
50-7-3736	steel	raw	20	77	1.2	3	10	16	3.2	22
50-7-3737	steel	raw	22	120	1.5	5	13.5	30	4.6	36

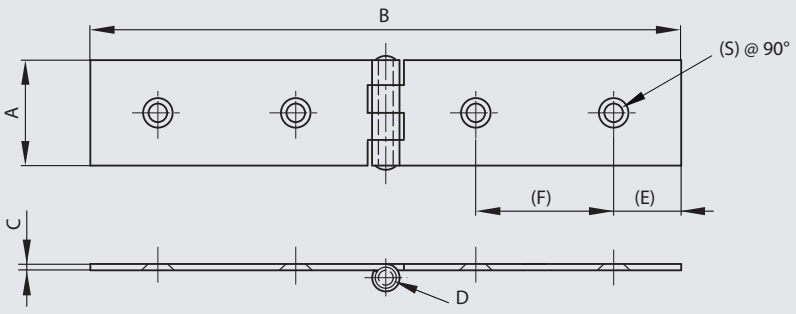

Small hinges

Hinges 25 and 30 mm long - with 6 holes



Part number	Material	Finish	A	B	C	D	E	F	S	Note	Weight (g)
50-7-3880	steel	raw	25	140	1.5	3.5	11	46	3.5	riveted pin	45
50-7-3341	steel	zinc plated	30	190	2.5	6	12.5	60	4		150
50-7-3342	steel	zinc plated	30	220	2.5	6	13.5	75	4		165

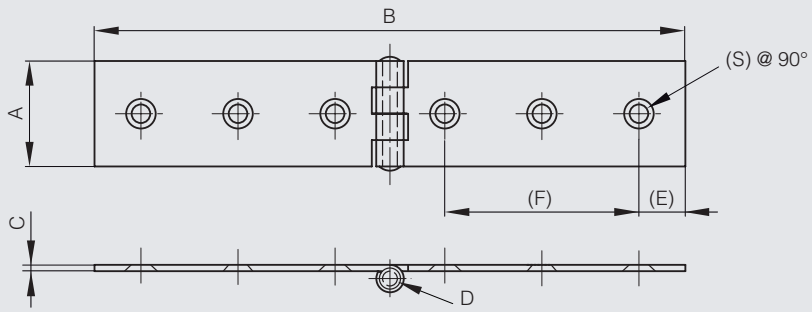

Hinges 30 mm long - with 4 holes

Available drilled or undrilled depending on part numbers.



Part number	Material	Finish	A	B	C	D	E	F	S	Note	Weight (g)
50-7-3343	steel	raw	30	140	2.5	6				undrilled	95
50-7-3344	steel	raw	30	160	3	6				undrilled	130
50-7-3346	steel	raw	30	220	3	6				undrilled	174
50-7-3339	steel	zinc plated	30	140	2.5	6	12.5	35	5.2	drilled	95
50-7-3340	steel	zinc plated	30	160	3	6	13.5	45	4	drilled	127

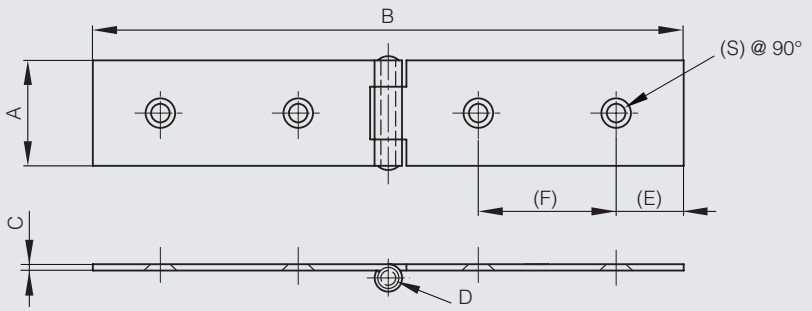

Small hinges

Hinge 20 x 57 mm



Part number	Material	Finish	A	B	C	D	S	Weight (g)
50-7-3332	steel	raw	20	57	1.2	3	3.2	13

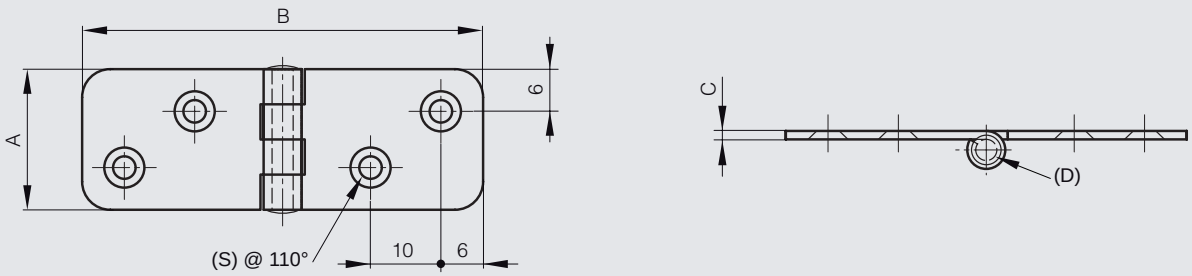

Hinges with reversed countersunk holes

Drilled and countersunk hinges.
Coutersink of male leaf is on the opposite side of female leaf.



Part number	Material	Finish	A	B	C	D	S	Weight (g)
50-7-3333	steel	raw	30	130	1.5	6	4	55
50-7-3334	steel	raw	40	190	2	8	4	138

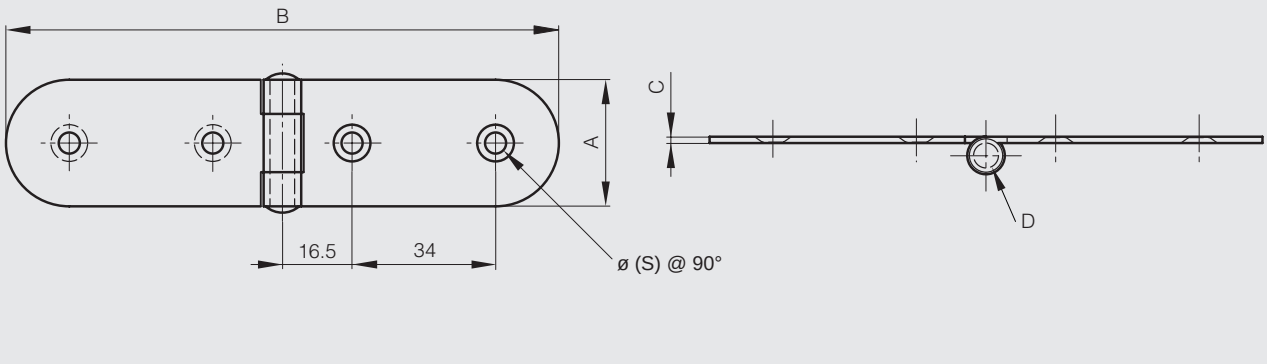

Small hinges

Hinge with oblong holes



Part number	Material	Finish	A	B	C	D	S	Weight (g)
50-1-3312	steel	zinc plated	65	70	2	4	6.7	81

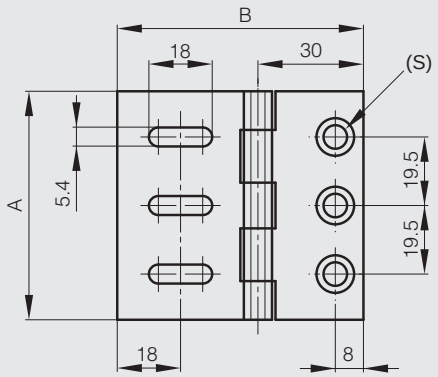

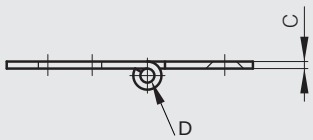

Hinge 30 x 83 mm



Part number	Material	Finish	A	B	C	D	S	Weight (g)
50-1-3313	steel	nickel plated	30	83	1.5	3.4	5.5	30

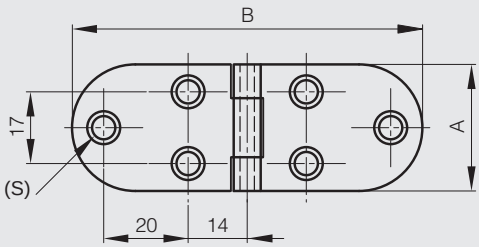

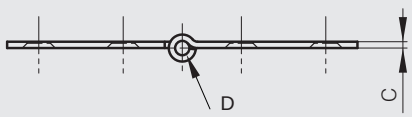

Small hinges

Bolt-on hinges in 2 parts

With solid brass pin and zinc plated brass washers.



Part number	Material	Finish	A	B	C	Weight (g)
72-1-3858	steel	zinc plated	33	10	16	87

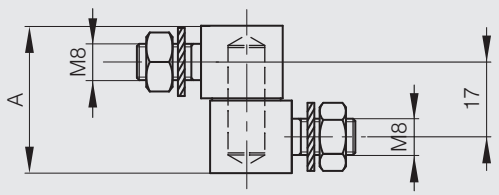

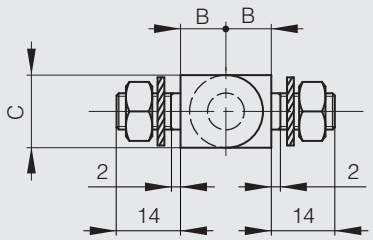

Bolt-on hinges in 3 parts - 49 mm long

With solid brass pin and zinc plated brass washers.



Part number	Material	Finish	A	B	C	D	E	Weight (g)
72-1-3733	steel	zinc plated	49	10	16	22	20	130
72-1-3857	steel	zinc plated	49	10	16	14	22.5	130

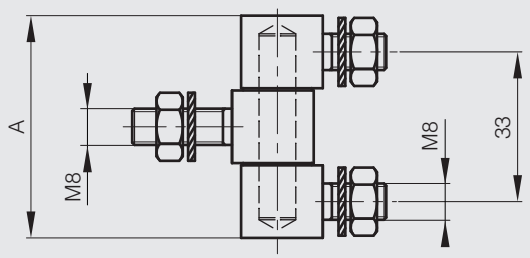

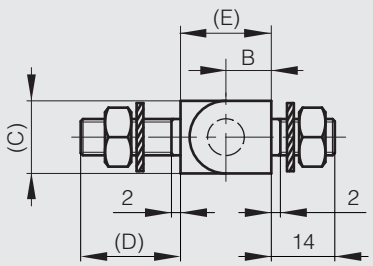

Bolt-on hinges in 3 parts - 36 mm long

With washers and M6 bolts.



Part number	Material	Finish	A	B	C	Weight (g)
72-1-3856	steel	raw	36	6.5	12	70

Bolt-on hinges in 3 parts with plate

No washers and no bolts.



Part number	Material	Finish	A	B	C	Weight (g)
72-1-3566	steel	raw	36	6.5	12	63

