Industrial Presentor

Terminals

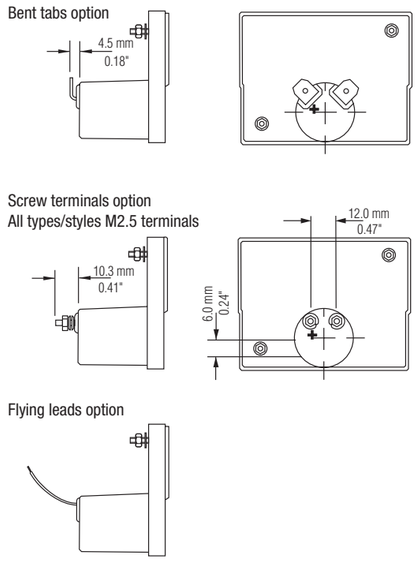

Illumination

Illumination is available in either of the three forms below.
Please contact the sales office for full information.

Overhead
Available for types 19W, 19WF, 29W, 29WF, 39W, 39WF.
Unit contains Ø6mm festoon style lamp available in 6V, 12V, or 24V.

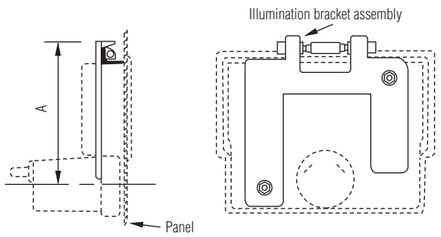

Light box
Available for all styles for types 29, 39. The meter fixing studs occupy different positions and rectangular panel cut-outs are required for styles M, B. Drawings are available on request.

Unit is available with either festoon style or T1¾ flanged lamps available in 6V, 12V, 24V. T1¾ flanged LEDs are also available in either 12V or 24V. (One lamp on type 29, two lamps on type 39).

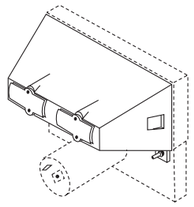

LED Illumination
Internal LED illumination is also available for most sizes and types. Please contact the sales office for full information.

As part of our policy of continuous product improvement we reserve the right to change specifications at any time.

Standard ranges

50mV to 500V dc 5 to 500V ac
50µA to 25A dc 50µA to 100mA ac

Other ranges and scales also available
- Higher ranges available using external shunts and transformers
- Right hand zero, centre zero and suppressed zero options

Range	DC					AC				
	mV	V	µA	mA	A	mV	V	µA	mA	A
0-1		●		●	●				●	
0-2		●		●	●				●	
0-5		●		●	✱		●		●	
0-10		●		●	✱		●		●	
0-15		●		●	✱		●		●	
0-20		●		●	✱		●		●	
0-25		●		●	✱		●		●	
0-50	●	●	●	●			●	●	●	
0-100	●	●	●	●			●	●	●	
0-150	●	●	●	●			●	●		
0-200	●	●	●	●			●	●		
0-250	●	●	●	●			●	●		
0-300	●	▲	●	●			▲	●		
0-400	●	▲	●	●			▲	●		
0-500	●	▲	●	●			▲	●		
CUSTOM	★	★	★	★	★		★	★	★	★

● Self contained
▲ External multiplier resistor
✱ Screw terminal meter with attached shunt (External type 15 & CM20)
★ Other inputs available on request

Note 1 Above 25A dc external shunt required — meter will have mV input to suit shunt
Note 2 Above 100mA AC external CT required — meter will have AC mA input to suit CT secondary

If the required range is not indicated by a symbol please enquire as it may be possible to supply to your special requirements

Terminal resistance

Range	Tolerance ± 15%	Range	Tolerance ± 15%
50µA	2000Ω	250µA	255Ω
100µA	1000Ω	500µA	155Ω
200µA	365Ω	1mA	50Ω

Accuracy

Type	Scale Length	DC	AC Rectifier
19	34.0mm/1.34"	±2.5%	±2.5%
29	60.0mm/2.36"	±1.5%	±2.5%
39	78.0mm/3.07"	±1.5%	±2.5%
49	100.0mm/3.94"	±1.5%	±1.5%

Weight

Type	Nett Weight	Type	Nett Weight
19	40g/1.4oz	39	90g/2.8oz
29	65g/2.3oz	49	130g/4.6oz

Europe
Sifam Tinsley Instrumentation Ltd
Central Building, Woodland CLose,
Old Wood Trading EA, Torquay,
Devon, England, TQ2 7BB

Tel : +44 (0) 1803 615139
Fax : +44 (0) 1803 616800

Email : sales@sifamtinsley.com
Web : www.sifamtinsley.com

SIFAM METERS
A division of Sifam Tinsley Precision Instrumentation Ltd

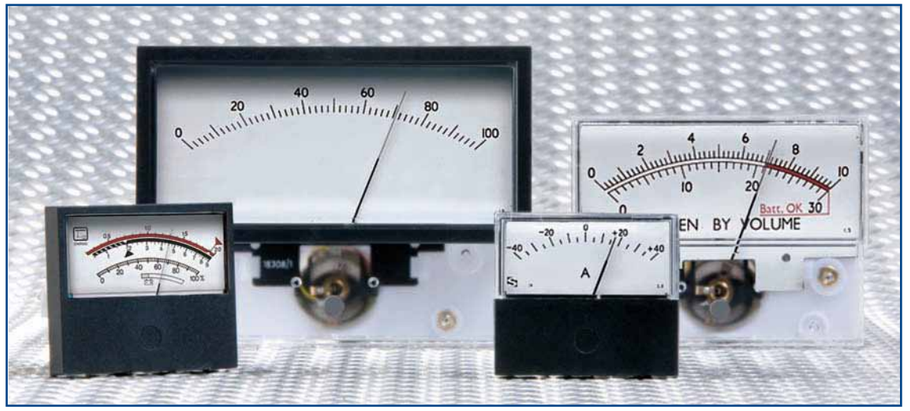

Industrial Presentor

Types 19, 29, 39, 49

The Presentor range of analogue moving coil instruments is available in four sizes each in four styles. Its modern flexible styling and high quality modular construction meets today's stringent design and economic requirements.

Complementing the range are the Audio Level Presentor and Fast Response Presentor, each also available four styles and three sizes. These two ranges offer performance close to full specification vu and PPM meters at affordable prices

Key Features
- Flexible styling – 4 sizes each in four styles
- High quality modular construction
- Taut band core magnet movements

Features and benefits
- Choices of four styles, each available in three sizes
  - Simple back of panel mounting
  - Back of panel mounting with accompanying bezel
  - Front of panel mounting with lower mask
  - Front of panel with full bezel
- Constructed with transparent acrylic front and high impact translucent rear body moulding. Masks and bezels, moulded in black ABS
- Taut band centre magnet movement incorporated as standard with 26mm diameter barrel. There is no calibration effect when mounted on a ferrous panel.
- Stronger suspension option for portable applications

Standard Ranges
- DC: 50 mV to 300V, 50µA to 2A
- AC: 5 to 300V, 50µA to 100mA
- Other ranges and scales also available
- Higher ranges available using external shunts and transformers
- Right hand zero, centre zero and suppressed zero options

Accuracy
All SIFAM meters are normally designed and supplied to meet the requirements of current BS89, IEC 51, EN60 051 and ANSI C39.1 standards.

Pointers & Dials
Pointers and dial markings are generally in accordance with the BS3693 requirements. Other types of pointer and/or custom dial markings together with company logos, including colour printing can be provided to suit individual requirements. Centre or right-hand zero scales are available if required. Mirror dials can be supplied (except for type 19).

Zero Adjuster
The zero adjust is normally positioned on the front of surface mounted styles (M and B types) and on the rear of behind panel styles (W and WF types). Other options may be specified.

Operating Temperature
-25°C to +55°C

Illumination
Comprehensive options are available:
- Overhead - available for W and WF styles. Using 6mm dia. festoon style lamp.
- Light box - available for all styles for types 29 and 39. Using either festoon or T1¾ flanged lamps.
- LED Illumination - internal LED illumination is also available for most sizes and types.

Terminals
6mm tabs are supplied as standard but threaded studs or flying leads are available.

Industrial Presentor

SIFAM METERS
A division of Sifam Tinsley Precision Instrumentation Ltd

Industrial Presentor

Presentor Style W

For back of panel mounting with only the scale and pointer visible.

Types: **19W, 29W, 39W, 49W**



Meter barrel cut out 27.0mm/1.06”
Fixing studs M2.5x10.0mm/0.39”
(except type 19: M2)

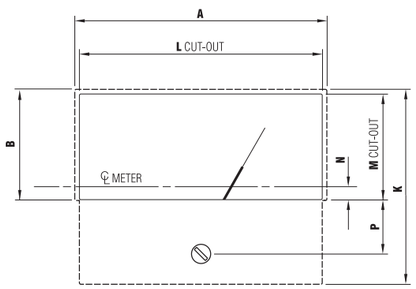

6.00mm/0.24” hole required when optional front zero is specified

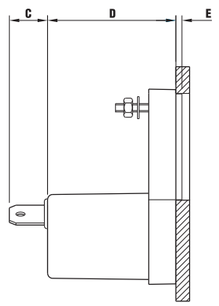

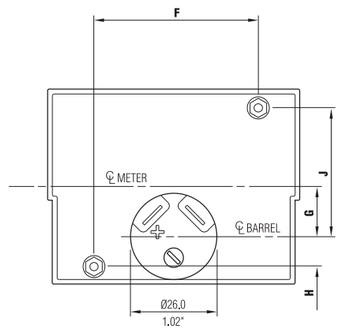

	19W		29W		39W		49W	
	mm	inches	mm	inches	mm	inches	mm	inches
A	43.9	1.73	76.1	2.99	94.0	3.70	124.0	4.88
B	21.0	0.82	33.3	1.31	41.9	1.65	57.1	2.25
C	11.5	0.45	11.5	0.45	11.5	0.45	11.5	0.45
D	37.2	1.46	38.7	1.52	39.2	1.54	40.3	1.59
E	1.50	0.06	1.80	0.07	2.00	0.08	2.10	0.08
F	32.0	1.26	47.8	1.88	57.2	2.25	92.0	3.62
G	4.70	0.18	15.0	0.59	20.9	0.82	26.9	1.06
H	Fixing studs in same horizontal plane above C/L 7.0mm/0.28”		9.70	0.38	8.60	0.34	Fixing studs in same horizontal plane above C/L 7.0mm/0.28”	
J			38.0	1.50	48.5	1.91		
K	37.9	1.49	58.8	2.32	72.4	2.85	93.0	3.66
L	42.4	1.66	73.66	2.90	91.50	3.60	121.00	4.76
M	20.20	0.79	32.26	1.27	40.50	1.59	55.50	2.19
N	2.0	0.08	3.90	0.15	5.70	0.22	10.6	0.42
P	9.90	0.39	16.1	0.63	20.4	0.80	21.5	0.85

Presentor Style WF

For back of panel mounting with bezel and with only the scale and pointer visible.

Types: **19WF, 29WF, 39WF, 49WF**



Max panel thickness 4.0mm/0.16”
(except type 19: 3.0mm/0.12”)
Meter barrel cut out 27.0mm/1.06”
Fixing studs M2.5x10.0mm/0.39”
(except type 19: M2)

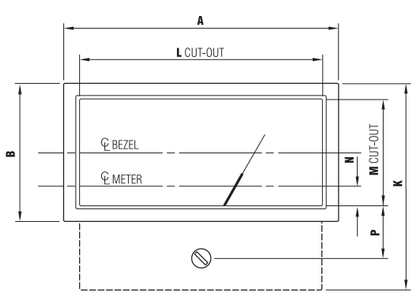

6.00mm/0.24” hole required when optional front zero is specified

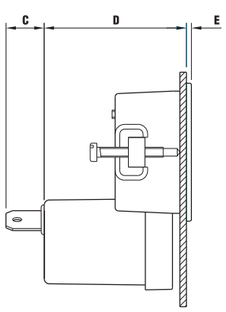

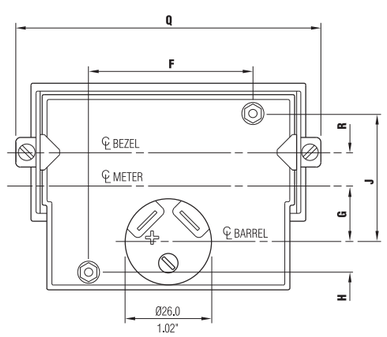

	19WF		29WF		39WF		49WF	
	mm	inches	mm	inches	mm	inches	mm	inches
A	49.2	1.94	82.8	3.26	101.0	3.98	131.0	5.16
B	27.0	1.06	41.6	1.64	50.5	1.99	65.6	2.58
C	11.5	0.45	11.5	0.45	11.5	0.45	11.5	0.45
D	40.8	1.61	42.9	1.69	43.4	1.71	44.5	1.75
E	1.50	0.06	1.50	0.06	1.6	0.06	1.70	0.07
F	32.0	1.26	47.8	1.88	57.2	2.25	92.0	3.62
G	6.10	0.24	16.7	0.66	22.7	0.89	28.7	1.13
H	Fixing studs in same horizontal plane above C/L 7.0mm/0.28”		9.70	0.38	8.60	0.34	Fixing studs in same horizontal plane above C/L 7.0mm/0.28”	
J			38.0	1.50	48.5	1.91		
K	40.6	1.60	62.2	2.45	76.1	2.99	96.5	3.80
L	47.0	1.85	80.0	3.15	98.0	3.86	128.0	5.04
M	24.0	0.94	37.0	1.46	46.0	1.81	61.0	2.40
N	5.20	0.20	8.10	0.32	10.2	0.40	15.1	0.59
P	8.00	0.31	13.7	0.54	17.7	0.70	18.8	0.74
Q	58.5	2.30	90.6	3.57	108.6	4.28	139.7	5.50
R	6.80	0.27	10.3	0.41	12.8	0.50	15.4	0.61

Presentor Style M

For front of panel mounting with lower mask.

Types: **19M, 29M, 39M, 49M**



Max panel thickness 6.0mm/0.24”
Meter barrel cut out 27.0mm/1.06”
Fixing studs M2.5x10.0mm/0.39”
(except type 19: M2)

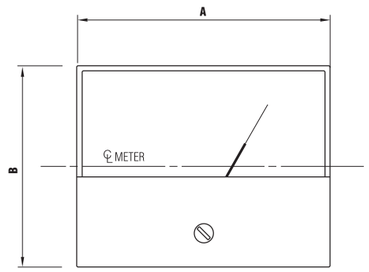

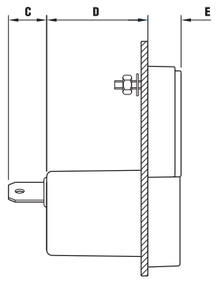

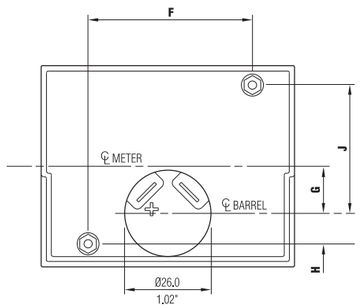

	19M		29M		39M		49M	
	mm	inches	mm	inches	mm	inches	mm	inches
A	43.9	1.73	76.1	2.99	94.0	3.70	124.0	4.88
B	38.8	1.53	60.3	2.37	74.0	2.91	94.6	3.72
C	11.5	0.45	11.5	0.45	11.5	0.45	11.5	0.45
D	31.2	1.23	30.5	1.20	30.2	1.19	30.2	1.19
E	7.50	0.30	10.0	0.39	11.0	0.43	12.2	0.48
F	32.0	1.26	47.8	1.88	57.2	2.25	92.0	3.62
G	4.20	0.17	14.2	0.56	20.0	0.79	26.1	1.03
H	Fixing studs in same horizontal plane above C/L 7.0mm/0.28”		9.70	0.38	8.60	0.34	Fixing studs in same horizontal plane above C/L 7.0mm/0.28”	
J			38.0	1.50	48.5	1.91		

Presentor Style B

For front of panel mounting with full bezel

Types: **19B, 29B, 39B, 49B**



Max panel thickness 6.0mm/0.24”
Meter barrel cut out 27.0mm/1.06”
Fixing studs M2.5x10.0mm/0.39”
(except type 19: M2)

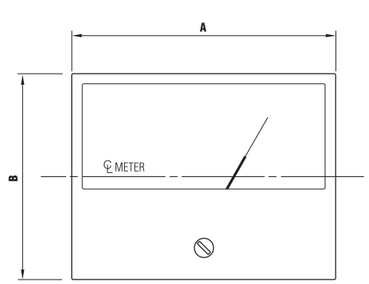

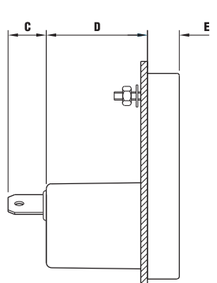

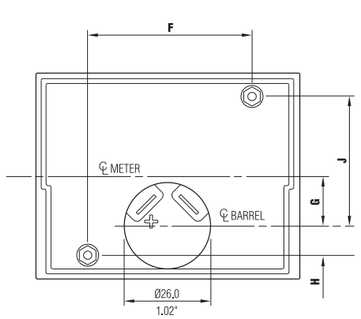

	19B		29B		39B		49B	
	mm	inches	mm	inches	mm	inches	mm	inches
A	46.0	1.81	79.5	3.13	97.5	3.84	127.7	5.03
B	40.0	1.57	61.9	2.44	76.4	3.01	96.6	3.80
C	11.5	0.45	11.5	0.45	11.5	0.45	11.5	0.45
D	31.2	1.23	30.5	1.20	30.2	1.19	30.2	1.19
E	7.50	0.30	10.0	0.39	11.0	0.43	12.2	0.48
F	32.0	1.26	47.8	1.88	57.2	2.25	92.0	3.62
G	4.8	0.19	15.0	0.59	20.8	0.82	26.9	1.06
H	Fixing studs in same horizontal plane above C/L 7.0mm/0.28”		9.70	0.38	8.60	0.34	Fixing studs in same horizontal plane above C/L 7.0mm/0.28”	
J			38.0	1.50	48.5	1.91		