Terminal element 640 Screw

(provisional technical data sheet)

WERMA Signaltechnik
GmbH + Co.
Dürbheimer Straße 15
D-78604 Rietheim-Weilheim
Phone 0049/7424/9557-0
Fax 0049/7424/9557-44

Mechanical specifications:

Material: PA GF - black
Seal: premounted with each element

Terminal: M3 clamps, ≤ 2,5mm², ≤ 0,4Nm
AWG 18 to AWG 14

Order-No.:

640 830 00 Terminal element (screw) for tube mounting with cap
640 820 00 Terminal element (screw) for base and bracket mounting with cap and seal

Further specifications:

Protection rating: IP 65 when mounted

Mass:
640.830.00 Terminal element for tube mounting
with cap
ca. 84g
640.820.00 Terminal element for base and bracket mounting with cap and seal
ca. 83g

Regulations: Conform to current EC-regulations.
UL-listed.

All specifications refer to Unenn and room temperature!

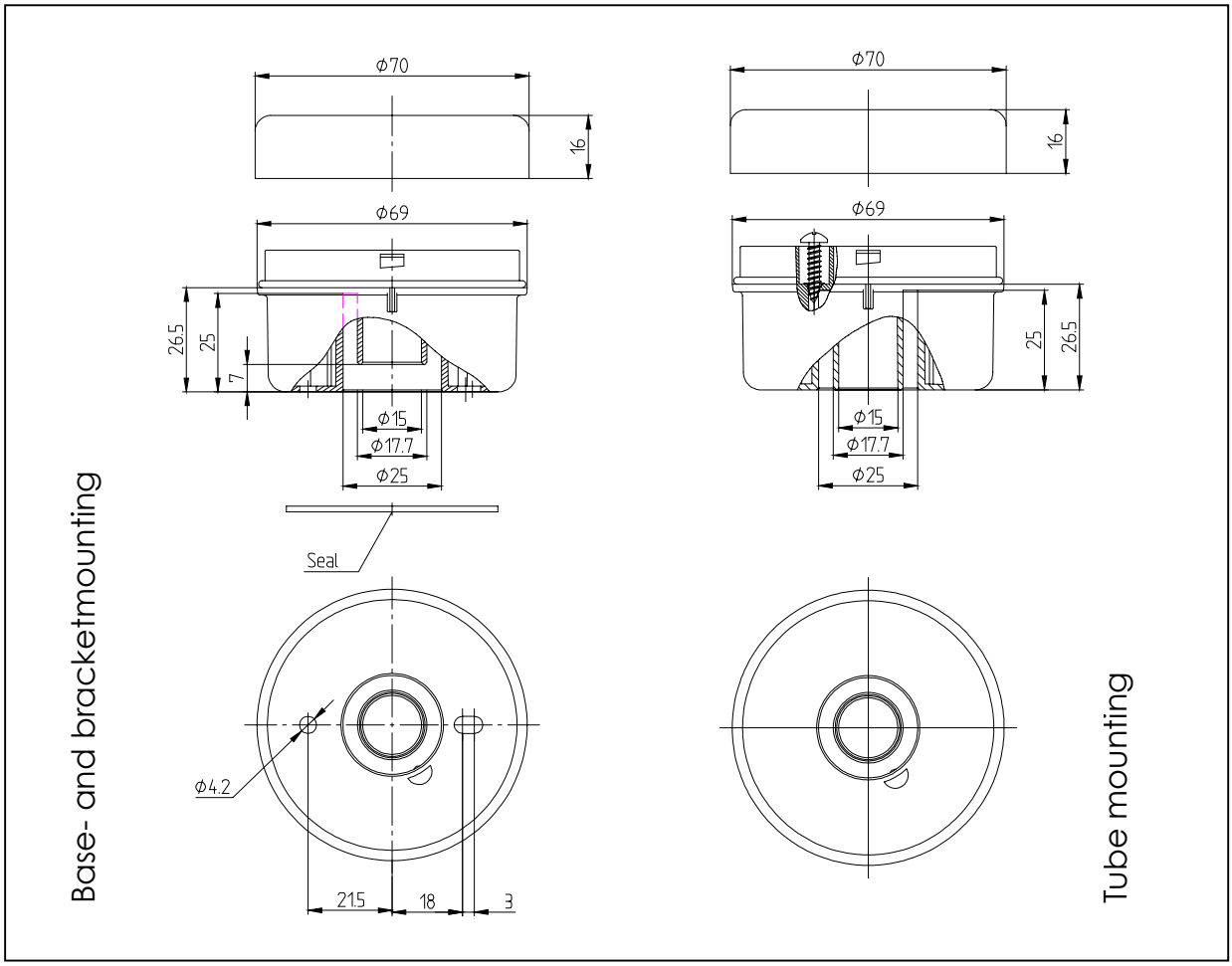

	Drawn up	proved	released	Data-sheet-No.
Name	E. Rudischhauser	S. Neumann	H. Elsäßer	**000 640 501**
Date	2001-10-30	2001-11-06	2001-11-09	Page 1 of 1