PRODUCT DETAILS

ARTICLE: 26259FD

WHEEL T 125X30/39 RB BOLT HOLE F.14 FORK M22/50

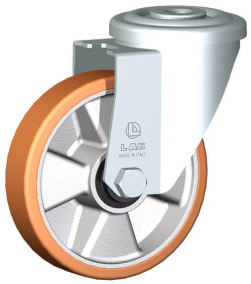

Wheel series T

Wheels with cast polyurethane coating 95 Sh.A on aluminium hub.
Available with ball or roller bearings.
Wheel fitted with standard roller bearing.

Castor series M22

M22 series, Medium-light pressed steel fork assemblies; swivel version has double ball raceways. Zincplated.

Sigle bolt hole fixing for bolt diam. 12-14 mm.

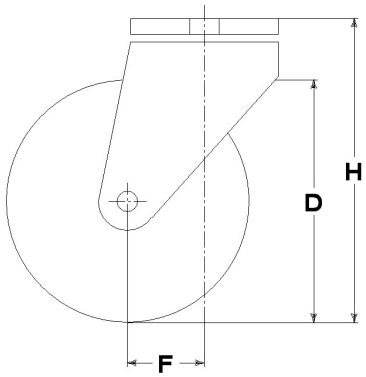

Technical data

Wheel diameter	D	125 mm
Tyre width	E	30,0 mm
Bore diameter	d	15 mm
Weight article		1,140 kg
Hub width	L	40 mm
Overall height	H	159 mm
Fixing bolt diameter	g	M12-14
Offset	F	49 mm
Fork width	U	50 mm
Load Capacity		200 kg

Related Articles

Spare part wheel: 8309
Version with footguard: 26259PPFD
Version with trailing brake: 26259FRFD
Version with trailing brake and footguard: 26259FRPPFD

GENERAL INFORMATION / RECOMMENDATIONS AND WARNINGS
The cited text and the complete catalogue in their most up-dated versions are available in the OEM's website page www.lagspa.it/downloads. The dimensions, descriptions, specifications and illustrations herein are indicative and subject to variations without notice. The fact that products are illustrated herein does not necessarily imply they are available from stock nor does it place us under any obligation to supply them.
Tests carried out refer to the original products with original accessories: the replacement of one of the components with others of different manufacture might prevent the same results from being achieved and will automatically invalidate any guarantee. Please contact our technical service concerning any special application.