E12376

Connecting cable with socket

ADOGH080MSS0015H08

For 8-pole sockets the core colours are not standardised.
Please note the wiring of the sensor and the sockets (see data sheet).

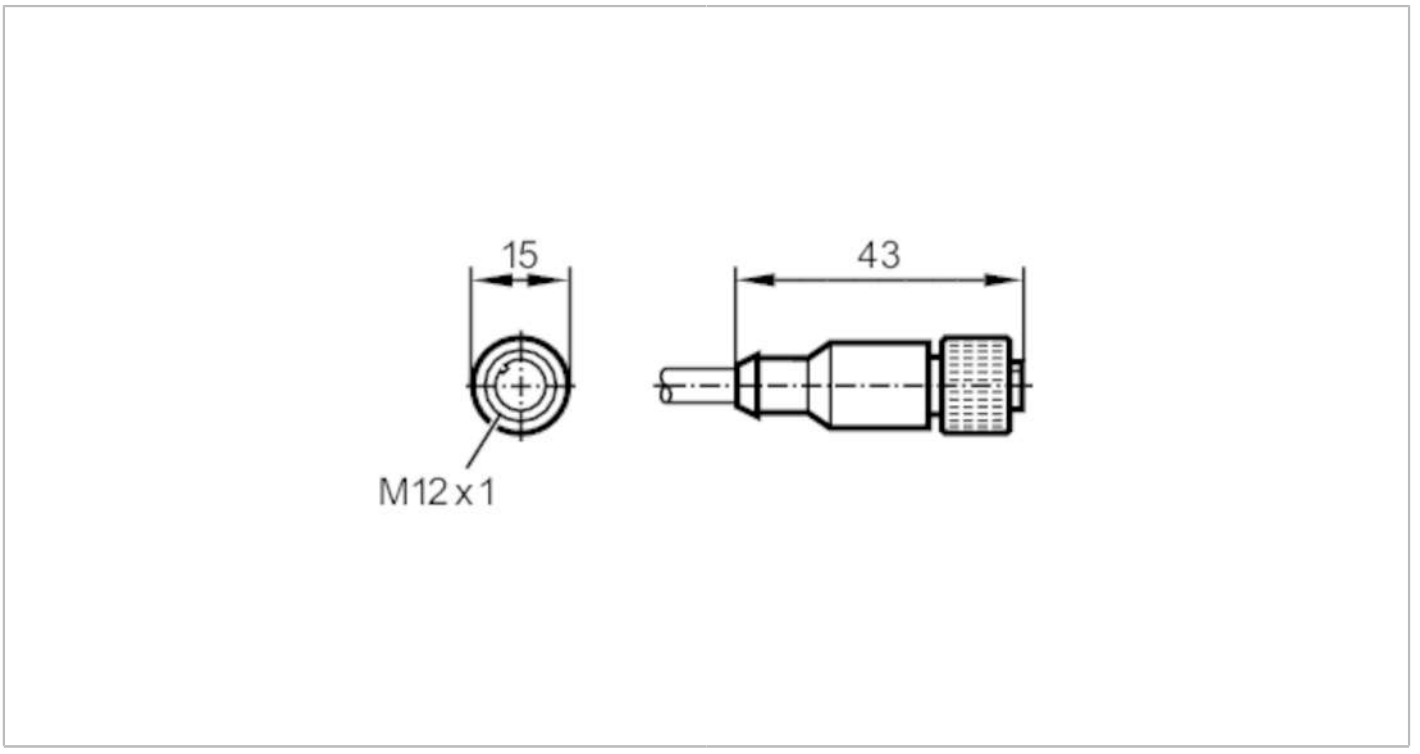

Application		
Special feature		Halogen-free
Electrical data		
Operating voltage	[V]	< 30 AC / < 36 DC
Operating conditions		
Ambient temperature	[°C]	-25...80
Protection		IP 68
Mechanical data		
Weight	[g]	912.5
Dimensions	[mm]	15 x 15 x 43
Materials		PUR
Moulded-body material		PUR
Material nut		brass, nickel-plated
Remarks		
Pack quantity		1 pcs.

E12376

Connecting cable with socket

ADOGH080MSS0015H08

Electrical connection

Cable: 15 m, PUR, Halogen-free, black, Ø 6.2 mm; 8 x 0.25 mm²

Electrical connection - socket

Connector: 1 x M12, straight; coding: A; Moulded body: PUR; Locking: brass, nickel-plated; Tightening torque: 0.7...0.9 Nm



Connection

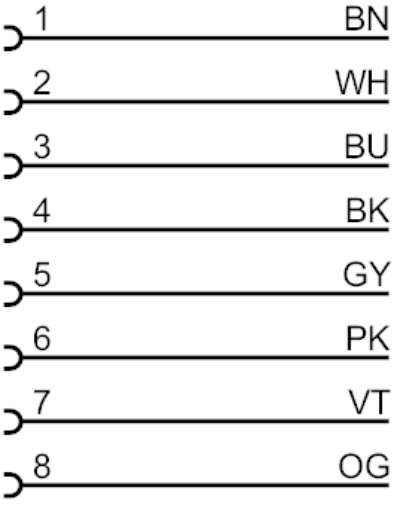

	Core colours :
BK =	black
BN =	brown
BU =	blue
GY =	grey
PK =	pink
OG =	orange
VT =	lilac
WH =	white