Pressure regulator, Series MU1-RGS

R402000233

General series information
AVENTICS Series MU1 Air Preparation Units

- The AVENTICS Series MU1 components are ideal for applications in harsh environments. They offer large thread connections to guarantee a high compressed air flow rate and provide reliable filtration, regulation and lubrication.



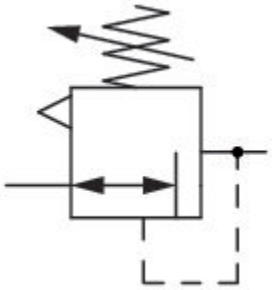

Technical data

Industry	Industrial
Function	Standard pressure regulator
Parts	Pressure regulator
Pressure gauge	without pressure gauge
Mounting orientation	Any
Regulator type	Diaphragm-type pressure regulator
Port	G 1 1/2
Nominal flow Qn	16500 l/min
Regulation range min.	0.5 bar
Regulation range max.	10 bar
Working pressure min.	0.5 bar
Working pressure max	25 bar

Min. ambient temperature	-10 °C
Max. ambient temperature	60 °C
Activation	Mechanical
Regulator function	with relieving air exhaust
Pressure supply	single
Medium	Compressed air Neutral gases
Weight	2.5 kg

Material

Housing material	Die-cast aluminum
Seal material	Acrylonitrile butadiene rubber
Part No.	R402000233

Technical information

The pressure dew point must be at least 15 °C less than ambient and medium temperature and may not exceed 3 °C.

Nominal flow Qn with secondary pressure p2 = 6 bar at Δp = 1 bar

mounting: mounting bracket R412004873 or installation in piping

Dimensions

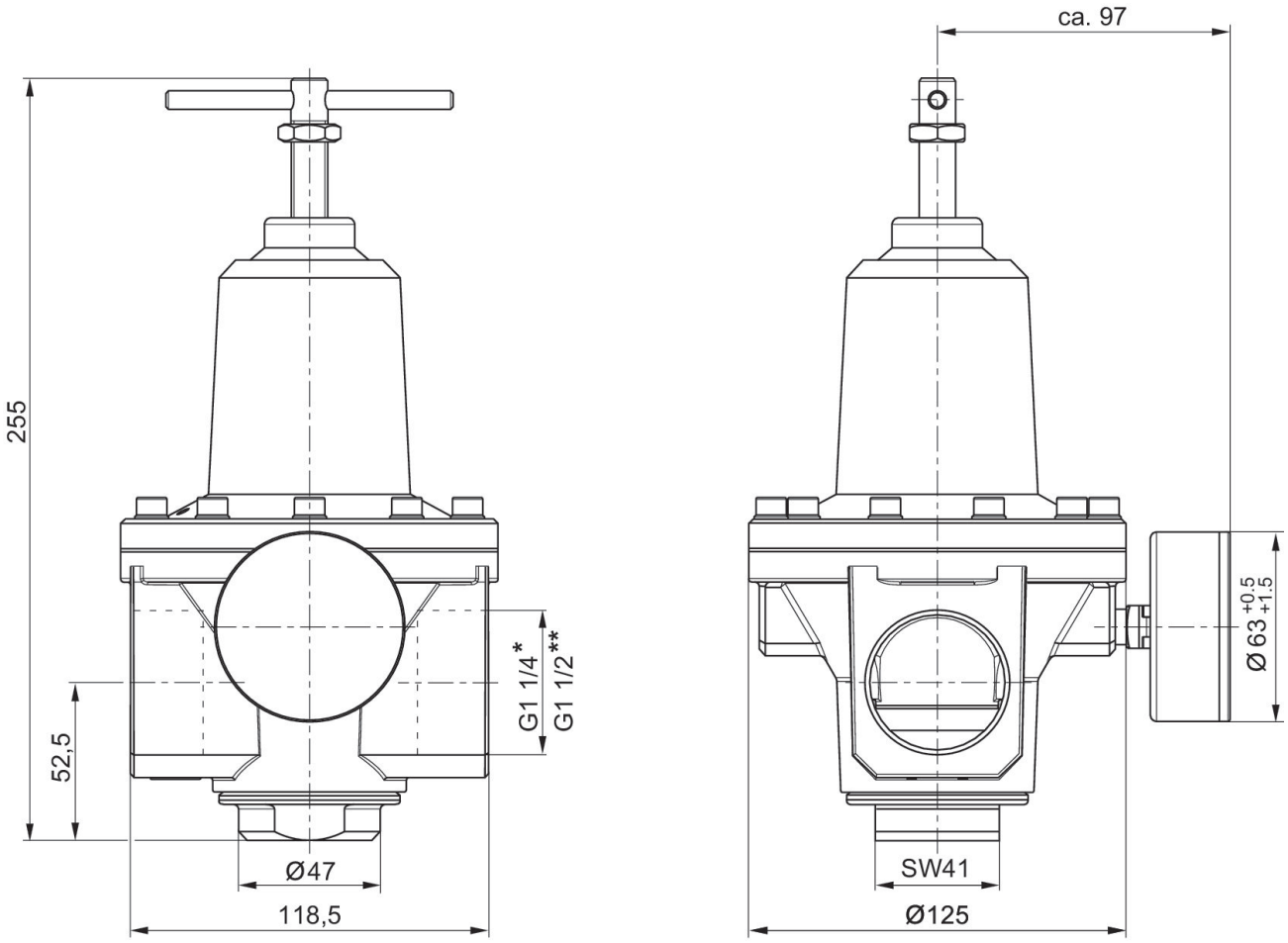

Pressure characteristics curve

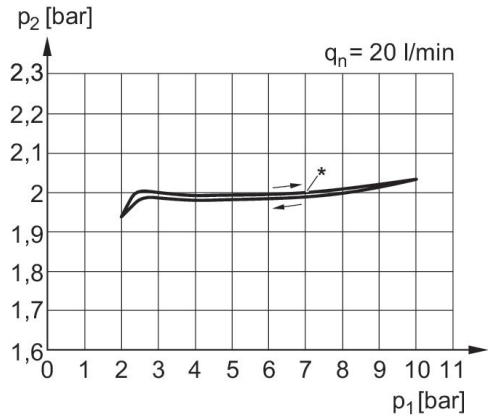

p1 = Working pressure
p2 = Secondary pressure
q = flow rate
* starting point

Flow rate characteristic (secondary range p2: 0.5 - 10 bar)

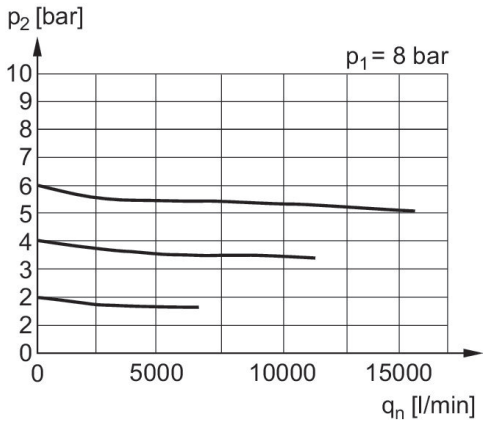

p1 = Working pressure
p2 = Secondary pressure
qn = Nominal flow