Snap Action Switch
V

General Purpose Snap Action Switch

- Industry standard design with 10/15 A ratings
- Long service life of 50,000,000 operations minimum (mechanical)
- RoHS Compliant



Ordering Information

■ Thermoset Material

(●: standard. ❍: available on request)

Remarks	Ratings	Common terminal position	Contact gap		Terminal shape (see note)					OF max					Model
			1 mm	0.5 mm	A	C2	C	B	E	15	25	100	200	400	
Mounted with 2.9 mm dia. screws. The switch unit is housed in a thermoset case, and has high versatility in applications.	15 A, 250 V	Bottom	❍	●	●	●	❍	❍	❍	–	–	❍	●	❍	**V-15**
	10 A, 250 V	Bottom	❍	●	●	●	❍	❍	❍	–	–	●	●	–	**V-10**

Note: A: Solder/quick connect terminal (#187)
C2: Quick connect terminal (#187)
C: Quick connect terminal (#250)
B: Screw terminal
E: Short solder terminal

Ordering Information - continued from previous page

Actuator	Common terminal position	Contact form	Connect terminal	Model		
				Rated current		
				15 A	10 A	
				200 grams	200 grams	100 grams
Pin plunger 	Bottom	SPDT	A	**V -15G-1A5-K**	**V-10G-1A5-K**	**V-10G-1A4-K**
			C2	**V-15G-1C25-K**	**V-10G-1C25-K**	**V-10G-1C24-K**
			C	**V-15G-1C5-K**	**—**	**—**
			B	**V-15G-1B5-K**	**V-10G-1B5-K**	**V-10G-1B4-K**
			E	**V-15G-1E5-K**	**—**	**V-10G-1E4-K**
		SPST-NC	A	**V-15G-2A5-K**	**V-10G-2A5-K**	**V-10G-2A4-K**
			C2	**V-15G-2C25-K**	**V-10G-2C25-K**	**V-10G-2C24-K**
		SPST-NO	A	**V-15G-3A5-K**	**V-10G-3A5-K**	**V-10G-3A4-K**
			C2	**V-15G-3C25-K**	**V-10G-3C25-K**	**V-10G-3C24-K**
			C	**V-15G-3C5-K**	**—**	**—**
	Side	SPDT	A	**V-15G-4A5-K**	**V-10G-4A5-K**	**V-10G-4A4-K**
		SPST-NC	A	**—**	**V-10G-5A5-K**	**V-10G-5A4-K**
		SPST-NO	A	**V-15G-6A5-K**	**V-10G-6A5-K**	**V-10G-6A4-K**
Short hinge lever 	Bottom	SPDT	A	**—**	**V-10G1-1A5-K**	**V-10G1-1A4-K**
			C2	**V-15G1-1C25-K**	**V-10G1-1C25-K**	**V-10G1-1C24-K**
			B	**—**	**V-10G1-1B5-K**	**V-10G1-1B4-K**
			E	**V-15G1-1E5-K**	**V-10G1-1E5-K**	**V-10G1-1E4-K**
Hinge lever 	Bottom	SPDT	A	**V-15G2-1A5-K**	**V-10G2-1A5-K**	**V-10G2-1A4-K**
			C2	**V-15G2-1C25-K**	**V-10G2-1C25-K**	**V-10G2-1C24-K**
			B	**—**	**V-10G2-1B5-K**	**V-10G2-1B4-K**
			E	**V-15G2-1E5-K**	**V-10G2-1E5-K**	**—**
Long hinge lever 	Bottom	SPDT	A	**V-15G3-1A5-K**	**V-10G3-1A5-K**	**V-10G3-1A4-K**
			C2	**V-15G3-1C25-K**	**V-10G3-1C25-K**	**V-10G3-1C24-K**
			B	**V-15G3-1B5-K**	**V-10G3-1B5-K**	**V-10G3-1B4-K**
			E	**—**	**V-10G3-1E5-K**	**V-10G3-1E4-K**
Simulated roller lever 	Bottom	SPDT	A	**V-15G4-1A5-K**	**V-10G4-1A5-K**	**V-10G4-1A4-K**
			C2	**V-15G4-1C25-K**	**V-10G4-1C25-K**	**V-10G4-1C24-K**
			B	**—**	**V-10G4-1B5-K**	**V-10G4-1B4-K**
			E	**—**	**V-10G4-1E5-K**	**V-10G4-1E4-K**
Short hinge roller lever 	Bottom	SPDT	A	**V-15G5-1A5-K**	**V-10G5-1A5-K**	**V-10G5-1A4-K**
			C2	**V-15G5-1C25-K**	**V-10G5-1C25-K**	**V-10G5-1C24-K**
			B	**V-15G5-1B5-K**	**V-10G5-1B5-K**	**V-10G5-1B4-K**
Hinge roller lever 	Bottom	SPDT	A	**V-15G6-1A5-K**	**V-10G6-1A5-K**	**V-10G6-1A4-K**
			C2	**V-15G6-1C25-K**	**—**	**V-10G6-1C24-K**
			B	**V-15G6-1B5-K**	**V-10G6-1B5-K**	**V-10G6-1B4-K**
			E	**V-15G6-1E5-K**	**V-10G6-1E5-K**	**V-10G6-1E4-K**

Note: 1. For SPST-NC and SPST-NO with levers consult Omron.

2. An insulation barrier is available upon request for thermoplastic types.

Specifications

■ Characteristics

		V-15	V-10
Operating speed		0.1 mm to 1 m/second (0.004 to 39.4 in/second) at pin plunger	
Operating frequency	**Mechanical**	600 operations per minute	
	Electrical	60 operations per minute	
Contact resistance		15 mΩ max. (initial)	30 mΩ max. (initial)
Insulation resistance		100 MΩ min. at 500 VDC	
Dielectric strength (VAC)		1,000 VAC, between non-continuous terminals 1,500 VAC, between each terminal and ground	
Vibration (see note 2)	**Malfunction durability**	10 to 55 Hz, 1.5 mm double amplitude	
Shock (see note 2)	**Mechanical durability**	1,000 m/s^2 min. (approx. 100 g)	
	Malfunction durability	300 m/s^2 min. (approx. 30 g)	200 m/s^2 min. (approx. 20 g)
Ambient temperature	**Operating**	-25° to 80°C	
Humidity	**Operating**	85% RH max	
Service life	**Mechanical**	50,000,000 operations min.	
	Electrical	100,000 operations min.	300,000 operations min.
Weight		Approx. 6.2 g (pin plunger type)	

Note: 1. Data shown are of initial value.

2. The values indicated here are of the pin plunger type.

■ Operating Characteristics

	Part number					
Characteristics	**V-15G-1□5-K** **V-10G-1□5-K**	**V-10G-1□4-K**	**V-15G-1□5-K** **V-10G-1□5-K**	**V-10G1-1□4-K**	**V-15G2-1□5-K** **V-10G2-1□5-K**	**V-10G2-1□4-K**
OF max.	200 g	100 g	200 g	100 g	125 g	60 g
RF min.	50 g	20 g	50 g	15 g	14 g	6 g
PT max.	1.2 mm (0.05 in)		1.5 mm (0.06 in)		3.3 mm (0.13 in)	
OT min.	1.3 mm (0.05 in)		1.0 mm (0.04 in)		2.3 mm (0.09 in)	
MD max.	0.3 mm (0.01 in)		0.5 mm (0.02 in)		0.8 mm (0.03 in)	
OP	14.7±0.4 mm (0.58±0.02 in)		15.2±0.5 mm (0.60±0.02 in)		$15.2^{+2.6}_{-3.2}$ mm ($0.60^{+0.10}_{-0.13}$ in)	15.2±1.2 mm (0.60±0.05 in)

	Part number					
Characteristics	**V-15G3-1□5-K** **V-10G3-1□5-K**	**V-10G3-1□4-K**	**V-15G5-1□5-K** **V-10G5-1□5-K**	**V-10G4-1□4-K**	**V-15G5-1□5-K** **V-10G5-1□5-K**	**V-10G5-1□4-K**
OF max.	70 g	35 g	125 g	60 g	240 g	120 g
RF min.	6 g	–	14 g	6 g	50 g	15 g
PT max.	9.0 mm (0.35 in)	7.6 mm (0.30 in)	3.3 mm (0.13 in)		1.5 mm (0.06 in)	
OT min.	3.0 mm (0.12 in)	3.2 mm (0.13 in)	2.3 mm (0.09 in)		1.0 mm (0.04 in)	
MD max.	2.0 mm (0.08 in)		0.8 mm (0.03 in)		0.5 mm (0.02 in)	
OP	15.2±2.6 mm (0.60±0.10 in)		18.7±1.2 mm (0.74±0.05 in)		20.7±0.6 mm (0.81±0.02 in)	

Characteristics	Part number	
	V-15G6-1□5-K V-10G6-1□5-K	V-10G6-1□4-K
OF max.	125 g	60 g
RF min.	14 g	6 g
PT max.	3.3 mm (0.13 in)	
OT min.	2.3 mm (0.09 in)	
MD max.	0.8 mm (0.03 in)	
OP	20.7±1.6 mm (0.81±0.06 in)	

■ Operating Characteristics - V Series Accessories

Part number	VAL	VAL2	VAV	VAV2	VAM	VAM-1
Switch	V-15G-1A5-K					
OF max.	230 g		35 g	75 g	200 g	300 g
RF min.	50 g		4 g	9 g	30 g	40 g
OT max.	0.8 mm (0.03 in)		3.6 mm (0.14 in)	1.5 mm (0.06 in)	7 mm (0.28 in)	5 mm (0.20 in)
MD min.	0.4 mm (0.02 in)		4.7 mm (0.19 in)	1.2 mm (0.05 in)	7 mm (0.28 in)	6 mm (0.24 in)
FP max.	17 mm (0.67 in)	22.6 mm (0.89 in)	–	–	45 mm (1.78 in)	47 mm (1.85 in)
OP	14.9±0.5 mm (0.59±0.02 in)	20.5±0.5 mm (0.81±0.02 in)	Approx. 10.6 mm (0.42 in)	18.6±1.6 mm (0.73±0.06 in)	20±9 mm (0.79±0.35 in)	30±5 mm (1.18±0.20 in)

■ Ratings

Type	Rated voltage	Non-inductive load (A)				Inductive load (A)				Inrush current Non-inductive & Inductive
		Resistive load		Lamp load		Inductive load		Motor load		
		NC	NO	NC	NO	NC	NO	NC	NO	NC/NO
15 A	250 VAC	15	15	2	2	10	10	3	3	36 A max.
	125 VDC	0.1	0.1	–	–	–	–	–	–	
10 A	250 VAC	10	10	1.5	1.5	6	6	2	2	24 A max.
	125 VDC	0.1	0.1	–	–	–	–	–	–	

Note: 1. Inductive load has a power factor of 0.4 min. (AC) and a time constant of 7 milliseconds max. (DC).

2. Lamp load has an inrush current of 10 times the steady-state current, while motor load has an inrush current of 6 times the steady-state current.

■ Contact Form

Common terminal position	Contact form		
	SPDT	SPST-NC*	SPST-NO*
Bottom type	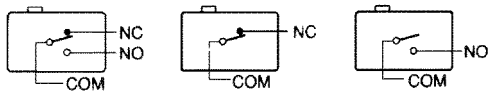		
Side type	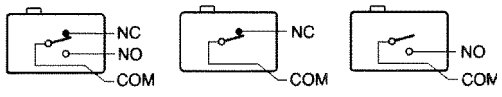		

* The SPST-NC and SPST-NO contact form types listed in the ordering information tables are for Pin Plunger models only. For information concerning lever models consult Omron.

Application load range

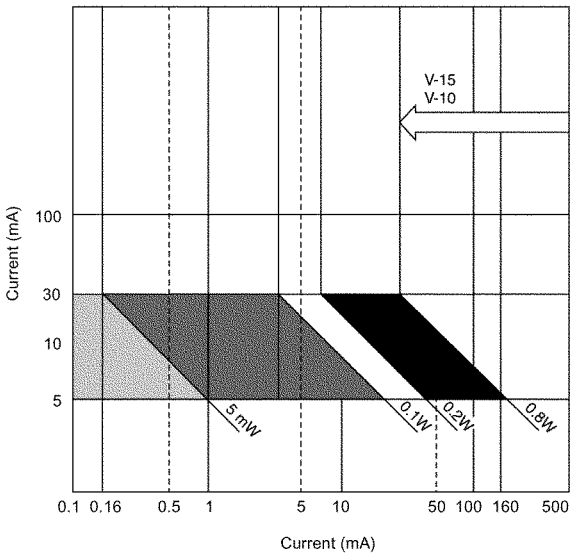

■ Approvals

UL (File No. E41515), CSA (File No. LR21642) IEC 1058-1, EN conforms 61058-1

OF max.	Thermoset material	
	V-15	V-10
100 g	UL CSA	UL CSA
200 g	UL CSA	UL CSA
400 g	UL CSA	– –

Note: 1. The rated values approved by each of the safety standards (e.g. UL, CSA) may be different from the performance characteristics individually defined in this catalog.

2. Models approved by DEMKO, NEMKO, BEAB and SETI are also available. Consult OMRON for detailed information.

Engineering Data

Mechanical service life
V-15, V-10

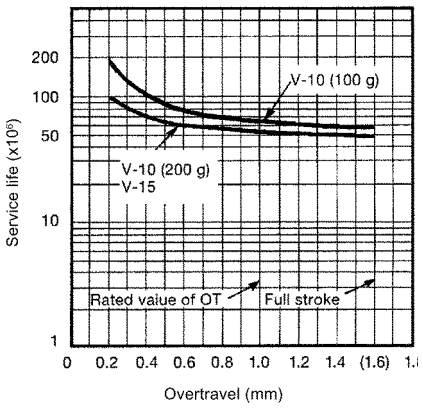

Electrical service life
V-15

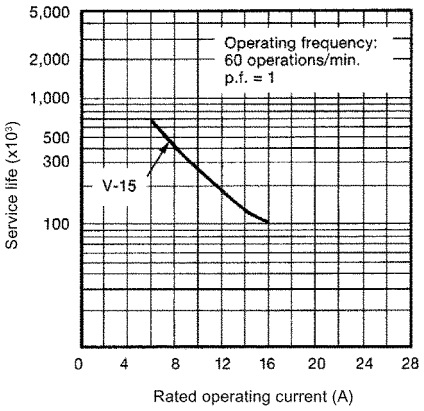

Electrical service life
V-10

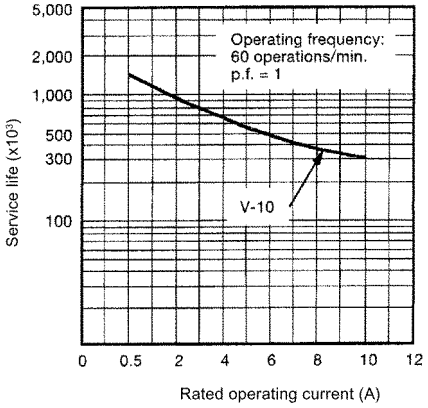

Dimensions

Unit: mm (inch)

The following figures show the models having quick connect terminals in the #250 series at the bottom of the case. For other terminals, please refer to “Terminals.”

Note: Unless otherwise specified, a tolerance of ± 0.4 mm applies to all dimensions.

■ Pin Plunger

V-15G-1□5-K
V-10G-1□5-K
V-10G-1□4-K

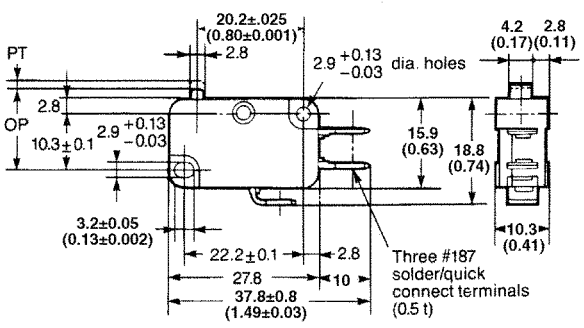

■ Short Hinge Lever

V-15G1-1□5-K
V-10G1-1□5-K
V-10G1-1□4-K

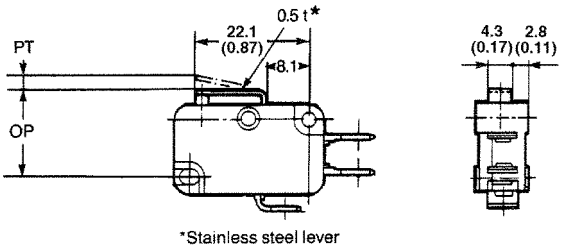

■ Hinge Lever

V-15G2-1□5-K
V-10G2-1□5-K
V-10G2-1□4-K

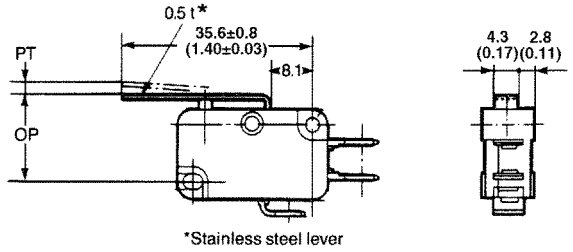

■ Long Hinge Lever

V-15G3-1□5-K
V-10G3-1□5-K
V-10G3-1□4-K

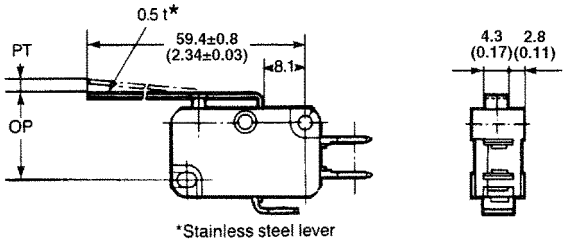

■ Simulated Roller Lever

V-15G4-1□5-K
V-10G4-1□5-K
V-10G4-1□4-K

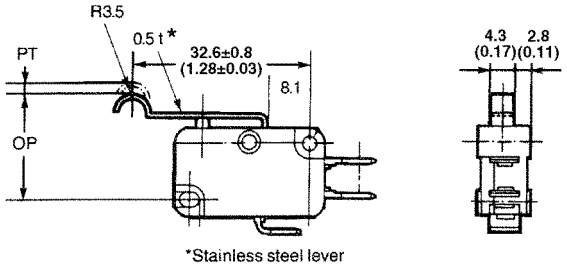

■ Short Hinge Roller Lever

V-15G5-1□5-K
V-10G5-1□5-K
V-10G5-1□4-K

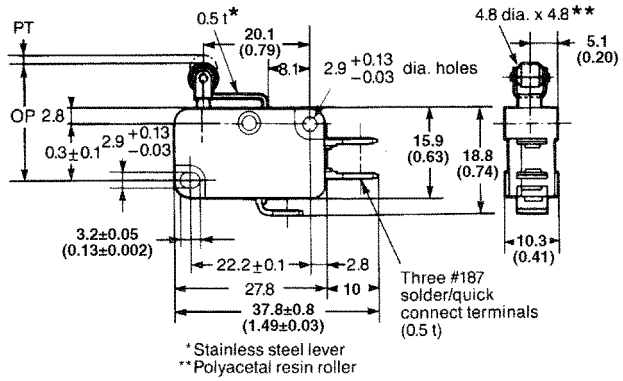

■ Hinge Roller Lever

V-15G6-1□5-K
V-10G6-1□5-K
V-10G6-1□4-K

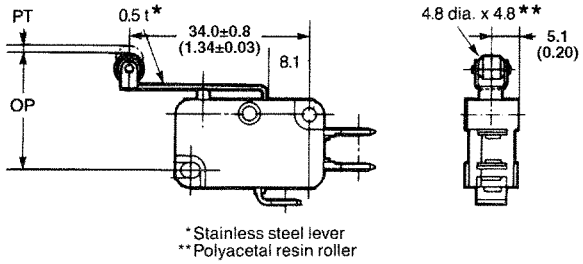

■ Terminals

General purpose type

	Solder terminal (A) (or quick connect terminals #187 series)	Quick connect terminal (C2) (#187 series)	Quick connect terminal (C) (#250 series)
Common terminal position	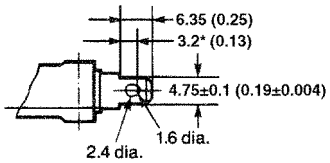 *Indicates the length to the center of the 1.6 dia. holes.	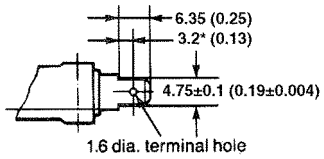	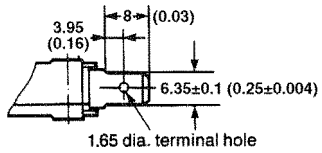
Bottom type	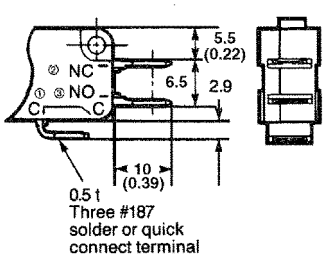	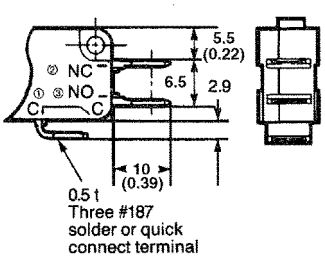	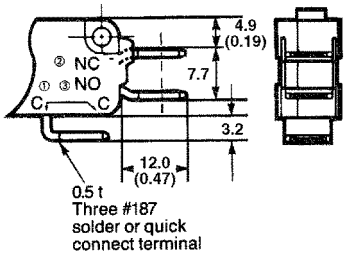

General purpose type

Side type	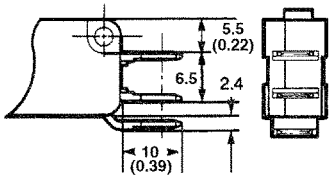	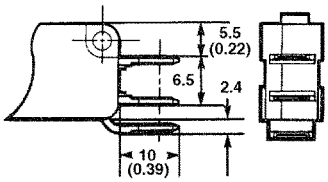	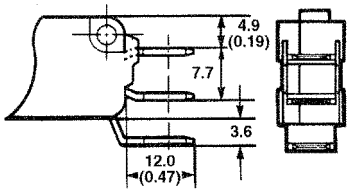

	Short solder terminal (E)	Screw Terminal (B)
Common terminal position		
Bottom terminal	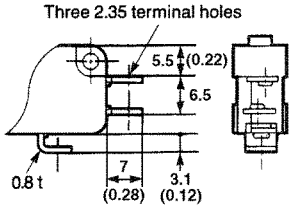	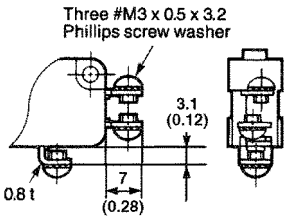

Accessory Dimensions

■ Actuator Accessories

Three series of actuators are optionally available: VAL, VAM, and VAV series.

The actuators in the VAL series are designated for rotary cam operations.

The VAM series actuators are highly resistive to vibration and shock; so, they are ideal for machine tools and automatic doors where the switches are subject to heavy vibration or shock.

The VAV series actuators are highly sensitive to force. Therefore, they should be used in an application where the operating force to be applied to the switch is critical.

All these actuators can be mounted on all OMRON snap action switches having the following dimensions.

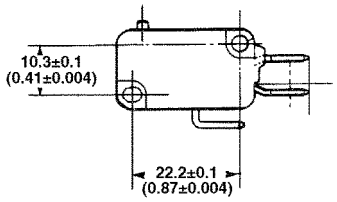

Note: 1. Unless otherwise specified, a tolerance of ± 0.4 mm applies to all dimensions.

2. The operating characteristics above apply when the actuator is attached to V-15-1A5-K basic switch. For any other models, consult OMRON.

■ Leaf Spring

VAL

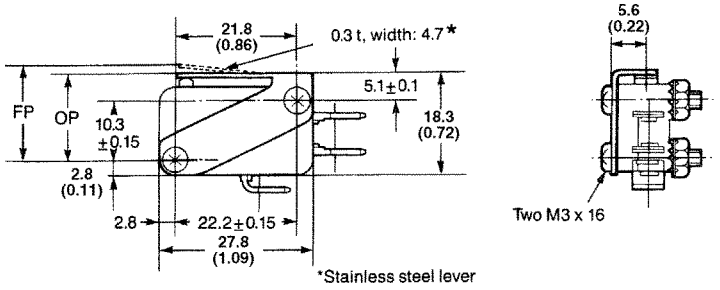

■ Roller Leaf Spring

VAL2

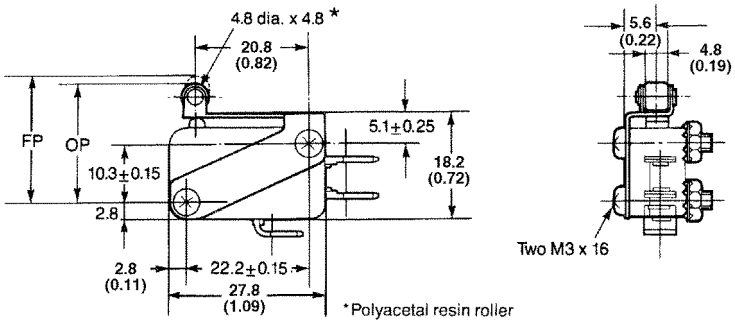

■ Long Hinge Lever

VAV

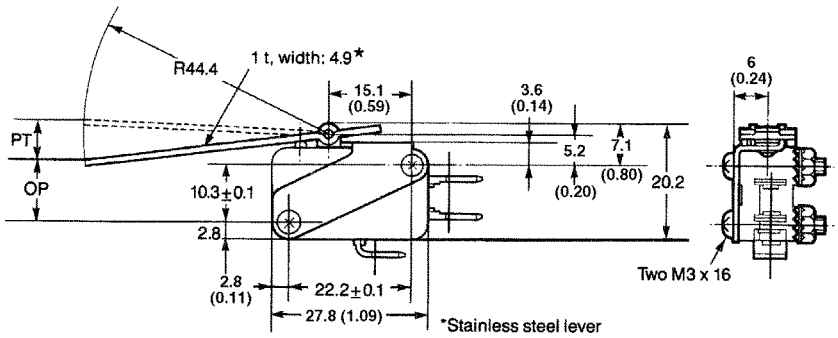

■ Hinge Roller Lever

VAV2

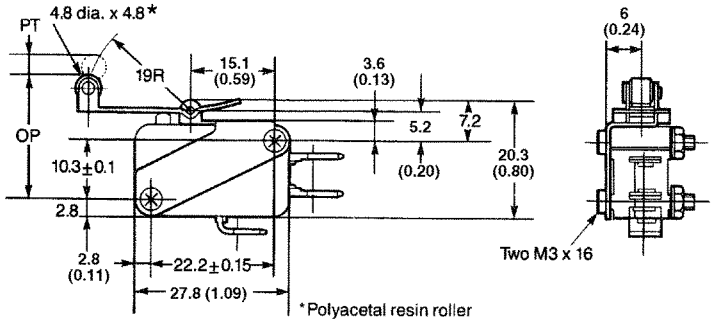

■ Reverse-Operation, Long Hinge Lever

VAM

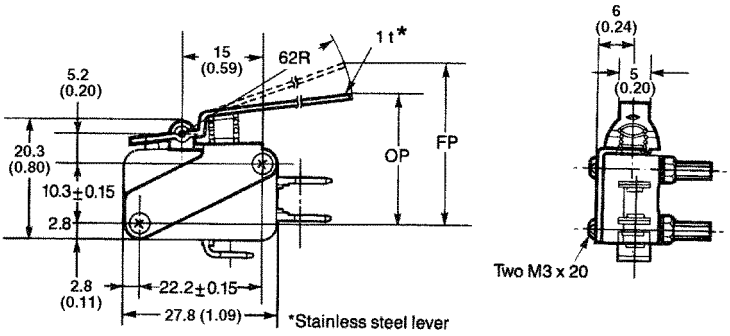

■ Reverse-operation, Simulated Roller Lever

VAM-1

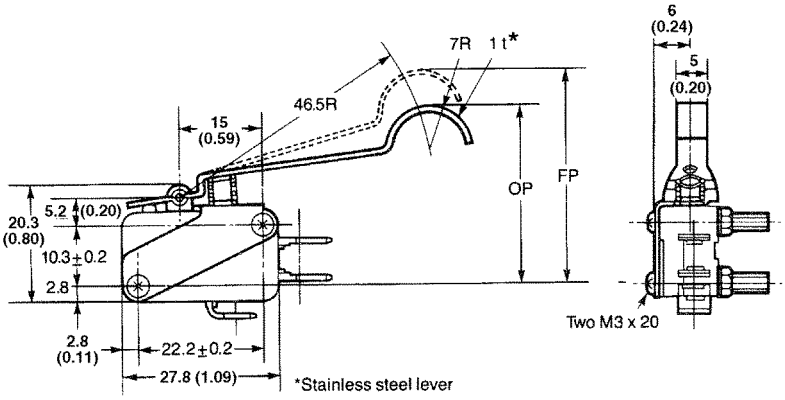

Precautions

■ Mounting

The switch is mounted with two M3 screws. When doing so, use an appropriate screwdriver and tighten the screws at a torque of 4 to 6 kg-cm.

To solder the lead to the terminal, apply a soldering iron rated at 60 W max. quickly (within 5 seconds) with the actuator at the free position.

Note that applying a soldering iron for too long a time or using one that is rated at more than 60 W may degrade the switch characteristics.

■ Operation

Make sure that the operating body pushes the switch actuator with an adequate force when the switch is to be operated, and that it does not touch the actuator when the switch is released.

Do not change the operating position by modifying the actuator.

Do not use the switch in a application where the operating speed is extremely slow or the actuator is set in the midpoint between the free position and operating position.

Install the pin plunger switch so that the operating force is applied in alignment with the stroke of the actuator. The switch should be set so that its stroke is in the range of 60 to 90% of the rated OT (minimum value) when the switch has been operated.

MEMO

Terms and Conditions of Sale

1. Offer; Acceptance. These terms and conditions (these "Terms") are deemed part of all quotations, acknowledgments, invoices, purchase orders and other documents, whether electronic or in writing, relating to the sale of products or services (collectively, the "Products") by Omron Electronic Components LLC ("Seller"). Seller hereby objects to any terms or conditions proposed in Buyer's purchase order or other documents which are inconsistent with, or in addition to, these Terms.
2. Prices; Payment. All prices stated are current, subject to change without notice by Seller. Buyer agrees to pay the price in effect at time of shipment. Payments for Products received are due net 30 days unless otherwise stated in the invoice.
3. Discounts. Cash discounts, if any, will apply only on the net amount of invoices sent to Buyer after deducting transportation charges, taxes and duties, and will be allowed only if (i) the invoice is paid according to Seller's payment terms and (ii) Buyer has no past due amounts owing to Seller.
4. Currencies. If the prices quoted herein are in a currency other than U.S. dollars, Buyer shall make remittance to Seller at the then current exchange rate most favorable to Seller and which is available on the due date; provided that if remittance is not made when due, Buyer will convert the amount to U.S. dollars at the then current exchange rate most favorable to Seller available during the period between the due date and the date remittance is actually made.
5. Governmental Approvals. Buyer shall be responsible for, and shall bear all costs involved in, obtaining any government approvals required for the importation or sale of the Products.
6. Taxes. All taxes, duties and other governmental charges (other than general real property and income taxes), including any interest or penalties thereon, imposed directly or indirectly on Seller or required to be collected directly or indirectly by Seller for the manufacture, production, sale, delivery, importation, consumption or use of the Products sold hereunder (including customs duties and sales, excise, use, turnover and license taxes) shall be charged to and remitted by Buyer to Seller.
7. Financial. If the financial position of Buyer at any time becomes unsatisfactory to Seller, Seller reserves the right to stop shipments or require satisfactory security or payment in advance. If Buyer fails to make payment or otherwise comply with these Terms or any related agreement, Seller may (without liability and in addition to other remedies) cancel any unshipped portion of Products sold hereunder and stop any Products in transit until Buyer pays all amounts, including amounts payable hereunder, whether or not then due, which are owing to it by Buyer. Buyer shall in any event remain liable for all unpaid accounts.
8. Cancellation; Etc. Orders are not subject to rescheduling or cancellation unless Buyer indemnifies Seller fully against all costs or expenses arising in connection therewith.
9. Force Majeure. Seller shall not be liable for any delay or failure in delivery resulting from causes beyond its control, including earthquakes, fires, floods, strikes or other labor disputes, shortage of labor or materials, accidents to machinery, acts of sabotage, riots, delay in or lack of transportation or the requirements of any government authority.
10. Shipping; Delivery. Unless otherwise expressly agreed in writing by Seller:
    1. Shipments shall be by a carrier selected by Seller;
    2. Such carrier shall act as the agent of Buyer and delivery to such carrier shall constitute delivery to Buyer;
    3. All sales and shipments of Products shall be FOB shipping point (unless otherwise stated in writing by Seller), at which point title to and all risk of loss of the Products shall pass from Seller to Buyer, provided that Seller shall retain a security interest in the Products until the full purchase price is paid by Buyer;
    4. Delivery and shipping dates are estimates only.
    5. Seller will package Products as it deems proper for protection against normal handling and extra charges apply to special conditions.
11. Claims. Any claim by Buyer against Seller for shortage or damage to the Products occurring before delivery to the carrier must be presented in writing to Seller within 30 days of receipt of shipment and include the original transportation bill signed by the carrier noting that the carrier received the Products from Seller in the condition claimed.
12. Warranties. (a) Exclusive Warranty. Seller's exclusive warranty is that the Products will be free from defects in materials and workmanship for a period of twelve months from the date of sale by Seller (or such other period expressed in writing by Seller). Seller disclaims all other warranties, express or implied. (b) Limitations. SELLER MAKES NO WARRANTY OR REPRESENTATION, EXPRESS OR IMPLIED, ABOUT NON-INFRINGEMENT, MERCHANTABILITY OR FITNESS FOR A PARTICULAR PURPOSE OF THE PRODUCTS. BUYER ACKNOWLEDGES THAT IT ALONE HAS DETERMINED THAT THE PRODUCTS WILL SUITABLY MEET THE REQUIREMENTS OF THEIR INTENDED USE. Seller further disclaims all warranties and responsibility of any type for claims or expenses based on infringement by the Products or otherwise of any intellectual property right. (c) Buyer Remedy. Seller's sole obligation hereunder shall be to replace (in the form originally shipped with Buyer responsible for labor charges for removal or replacement thereof) the non-complying Product or, at Seller's election, to repay or credit Buyer an amount equal to the purchase price of the Product; provided that in no event shall Seller be responsible for warranty, repair, indemnity or any other claims or expenses regarding the Products unless Seller's analysis confirms that the Products were properly handled, stored, installed and maintained and not subject to contamination, abuse, misuse or inappropriate modification. Return of any Products by Buyer must be approved in writing by Seller before shipment. Seller shall not be liable for the suitability or unsuitability or the results from the use of Products in combination with any electrical or electronic components, circuits, system assemblies, or any other materials or substances or environments. Any advice, recommendations or information given orally or in writing are not to be construed as an amendment or addition to the above warranty.
13. Limitation on Liability; Etc. SELLER SHALL NOT BE LIABLE FOR SPECIAL, INDIRECT, INCIDENTAL OR CONSEQUENTIAL DAMAGES, LOSS OF PROFITS OR PRODUCTION OR COMMERCIAL LOSS IN ANY WAY CONNECTED WITH THE PRODUCTS, WHETHER SUCH CLAIM IS BASED IN CONTRACT, WARRANTY, NEGLIGENCE OR STRICT LIABILITY. Further, in no event shall liability of Seller exceed the individual price of the Product on which liability is asserted.
14. Indemnities. Buyer shall indemnify and hold harmless Seller, its affiliates and its employees from and against all liabilities, losses, claims, costs and expenses (including attorney's fees and expenses) related to any claim, investigation, litigation or proceeding (whether or not Seller is a party) which arises or is alleged to arise from Buyer's acts or omissions under these Terms or in any way with respect to the Products. Without limiting the foregoing, Buyer (at its own expense) shall indemnify and hold harmless Seller and defend or settle any action brought against Seller to the extent that it is based on a claim that any Product made to Buyer specifications infringed intellectual property rights of another party.
15. Property; Confidentiality. The intellectual property embodied in the Products is the exclusive property of Seller and its affiliates and Buyer shall not attempt to duplicate it in any way without the written permission of Seller. Notwithstanding any charges to Buyer for engineering or tooling, all engineering and tooling shall remain the exclusive property of Seller. All information and materials supplied by Seller to Buyer relating to the Products are confidential and proprietary, and Buyer shall limit distribution thereof to its trusted employees and strictly prevent disclosure to any third party.
16. Miscellaneous. (a) Waiver. No failure or delay by Seller in exercising any right and no course of dealing between Buyer and Seller shall operate as a waiver of rights by Seller. (b) Assignment. Buyer may not assign its rights hereunder without Seller's written consent. (c) Law. These Terms are governed by Illinois law (without regard to conflict of law principles). Federal and state courts in Illinois shall have exclusive jurisdiction for any dispute hereunder. (d) Amendment. These Terms constitute the entire agreement between Buyer and Seller relating to the Products, and no provision may be changed or waived unless in writing signed by the parties. (e) Severability. If any provision hereof is rendered ineffective or invalid, such provision shall not invalidate any other provision. (f) Setoff. Buyer shall have no right to set off any amounts against the amount owing in respect of this invoice.. (g) Definitions. As used herein, "including" means "including without limitation".

Certain Precautions on Specifications and Use

1. Suitability for Use. Seller shall not be responsible for conformity with any standards, codes or regulations which apply to the combination of the Product in Buyer's application or use of the Product. At Buyer's request, Seller will provide applicable third party certification documents identifying ratings and limitations of use which apply to the Product. This information by itself is not sufficient for a complete determination of the suitability of the Product in combination with the end product, machine, system, or other application or use. Buyer shall be solely responsible for determining appropriateness of the particular Product with respect to Buyer's application, product or system. Buyer shall take application responsibility in all cases but the following is a non-exhaustive list of applications for which particular attention must be given:
   (i) Outdoor use, uses involving potential chemical contamination or electrical interference, or conditions or uses not described in this document.
   (ii) Energy control systems, combustion systems, railroad systems, aviation systems, medical equipment, amusement machines, vehicles, safety equipment, and installations subject to separate industry or government regulations.
   (iii) Use in consumer products or any use in significant quantities.
   (iv) Systems, machines and equipment that could present a risk to life or property. Please know and observe all prohibitions of use applicable to this product.

   NEVER USE THE PRODUCT FOR AN APPLICATION INVOLVING SERIOUS RISK TO LIFE OR PROPERTY WITHOUT ENSURING THAT THE SYSTEM AS A WHOLE HAS BEEN DESIGNED TO ADDRESS THE RISKS, AND THAT THE OMRON PRODUCT IS PROPERLY RATED AND INSTALLED FOR THE INTENDED USE WITHIN THE OVERALL EQUIPMENT OR SYSTEM.
2. Programmable Products. Seller shall not be responsible for the user's programming of a programmable product, or any consequence thereof.
3. Performance Data. Performance data given in this publication is provided as a guide for the user in determining suitability and does not constitute a warranty. It may represent the result of Seller's test conditions, and the users must correlate it to actual application requirements. Actual performance is subject to Seller's Warranty and Limitations of Liability.
4. Change in Specifications. Product specifications and accessories may be changed at any time based on improvements and other reasons. It is our practice to change part numbers when published ratings or features are changed, or when significant construction changes are made. However, some specifications of the Product may be changed without any notice. When in doubt, special part numbers may be assigned to fix or establish key specifications for your application. Please consult with your Seller representative at any time to confirm actual specifications of purchased Product.
5. Errors and Omissions. The information in this publication has been carefully checked and is believed to be accurate; however, no responsibility is assumed for clerical, typographical or proofreading errors, or omissions.
6. RoHS Compliance. Where indicated, our products currently comply, to the best of our knowledge as of the date of this publication, with the requirements of the European Union's Directive on the Restriction of certain Hazardous Substances ("RoHS"), although the requirements of RoHS do not take effect until July 2006. These requirements may be subject to change. Please consult our website for current information.

Complete "Terms and Conditions of Sale" for product purchase and use are on Omron's website at www.components.omron.com – under the "About Us" tab, in the Legal Matters section.

ALL DIMENSIONS SHOWN ARE IN MILLIMETERS.
To convert millimeters into inches, multiply by 0.03937. To convert grams into ounces, multiply by 0.03527.

OMRON

OMRON ELECTRONIC COMPONENTS LLC
55 E. Commerce Drive, Suite B
Schaumburg, IL 60173
847-882-2288

OMRON CANADA, INC.
885 Milner Avenue
Toronto, Ontario M1B 5V8
416-286-6465

OMRON ON-LINE
Global - http://www.omron.com
USA - http://www.components.omron.com
Canada - http://www.omron.ca

Cat. No. JB301-E3-01 3/05 Specifications subject to change without notice Printed in USA