A01ES-D series

Emergency stop switches •
panel cut-out Ø 16 mm



DISTINCTIVE FEATURES

Approved to EN 60947-5-5
5 prominent red actuator styles
Locked/unlocked status indicator
AC15 1.5 A 250 VAC, 6 A 250 VAC
Panel sealed to IP65



ENVIRONMENTAL SPECIFICATIONS

- Sealing options : front panel IP65, rear panel IP40 according to EN60947-5-5
- Operating temperature : -20 °C to +55 °C (-4 °F to +131 °F)

ELECTRICAL SPECIFICATIONS

- Electrical function : push to shut off, twist to release
- Current/voltage rating : AC-15 1.5 A 250 VAC, 6 A 250 VAC
- Electrical life : 6050 cycles
- Contact gap : > 3 mm
- Insulation resistance : 50 MΩ min
- Dielectric test voltage : 2,900 V

GENERAL SPECIFICATIONS

- Panel thickness : 6 mm (.236) max.
- Mechanical life : 6,050 cycles
- Operating force : 18 to 20 N
- Torque : 0.8 Nm
- Soldering : 350 °C (662 °F) , 5 seconds (IEC 68-2-2-20Tb, method 2)
- Switch terminals : solder/ quick-connect 2.8 mm (.110) (IEC 68-2-20)

The company reserves the right to change specifications without notice.

A01ES-D series

Emergency stop switches •
panel cut-out Ø 16 mm

MATERIALS

- Operator case : polyetherimide
- Actuator : polycarbonate
- Switch block : PBT
- Panel seal : neoprene

AGENCY APPROVAL

Switch block approved to
UL 1054 / VDE (EN 61058-1) and DEMKO (60947-5-5)

PANEL CUT-OUT

A01ES-DM - A01ES-DSP3

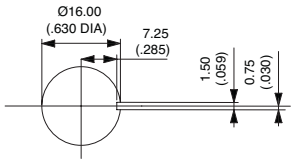

A01ES-D - A01ES-DF1- A01ES-DF2

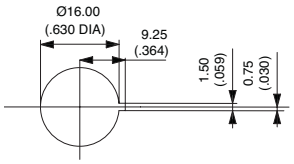

ELECTRICAL FUNCTIONS



Single pole
Normally Closed

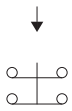

Double pole
Normally Closed

BUILD YOUR PART NUMBER

An emergency stop switch assembly requires : 1 operator + 1 switch block. Example : Ø 16 mm red twist to reset, knurled head actuator with double pole positive break switch block = A01ES-D + A0154B-D

OPERATOR

A01 — _ — _

SERIES	OPERATOR TYPE	ACTUATOR
	ES Emergency stop	DM Mushroom head (standard)
		D Knurled head
		DF1 Finger grip
		DF2 Smooth
		DSP3 Ø 40 mm head

SWITCH BLOCK

A01 — _ — _

SERIES	SWITCH BLOCK	OPTIONS
	50B-D Single pole	Blank None
	54B-D Double pole	Customization on request.

ABOUT THIS SERIES

Mounting accessories : standard hardware supplied : 1 nut and 1 flat seal

A01ES-D series

Emergency stop switches •
panel cut-out Ø 16 mm

MUSHROOM HEAD ACTUATOR - STANDARD



A01ES-DM

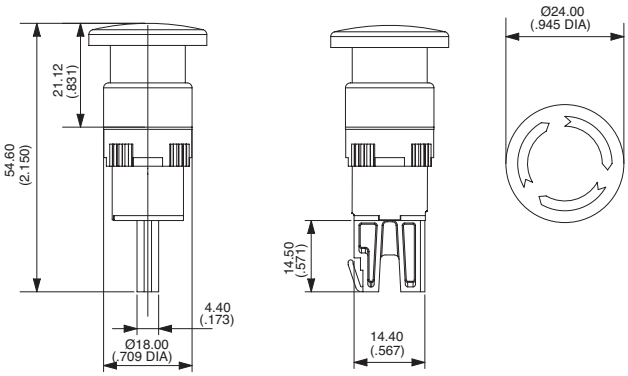

KNURLED HEAD ACTUATOR



A01ES-D

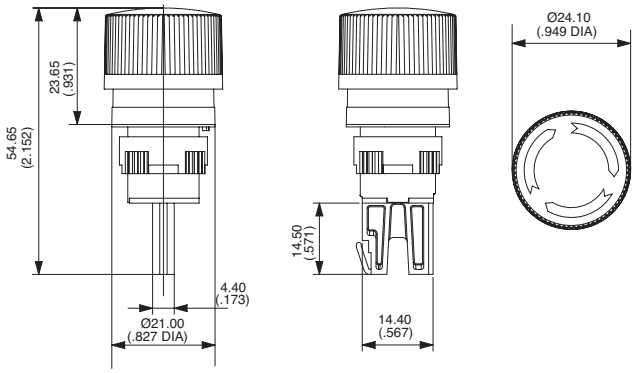

FINGER GRIP ACTUATOR



A01ES-DF1

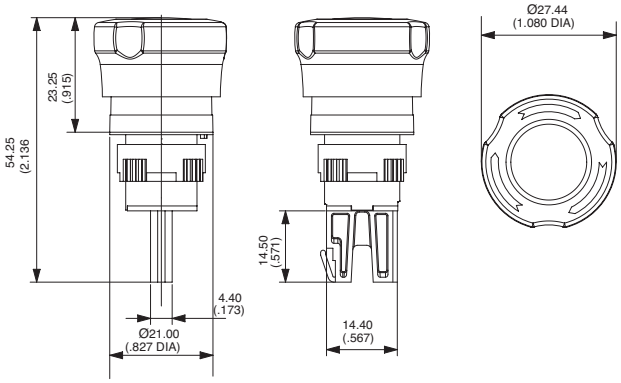

SMOOTH ACTUATOR



A01ES-DF2

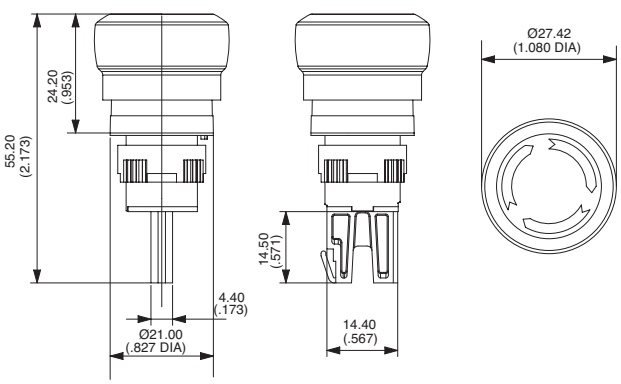

A01ES-D series

Emergency stop switches •
panel cut-out Ø 16 mm

Ø 40 MM HEAD ACTUATOR



A011ES-DSP3

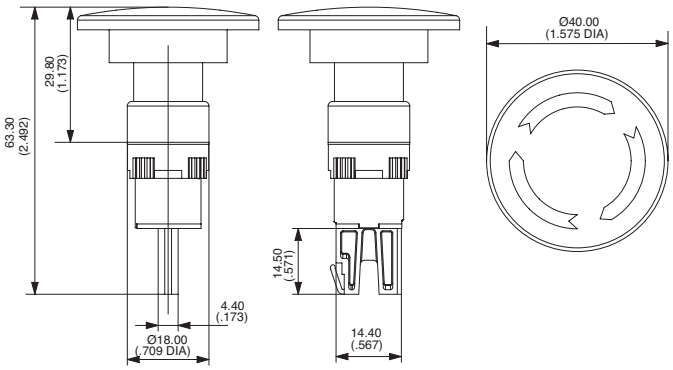

SINGLE POLE SWITCH BLOCK: A0150B-D

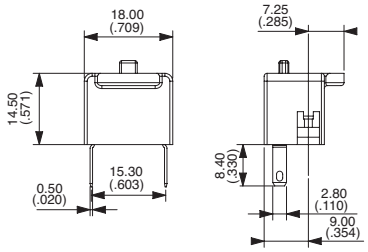

DOUBLE POLE SWITCH BLOCK: A0154B-D

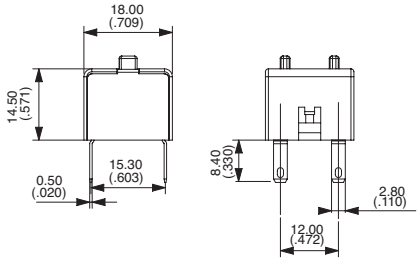

ACCESSORIES

To order separately

Ø 60 MM SELF ADHESIVE LABEL

A01YL1 English text
A01YL2 Without text
A01YL3 French text
A01YL4 Italian text
Other languages on request.

NUT TOOL

30-0001 Nut tool



A01ES-D series

Emergency stop switches •
panel cut-out Ø 16 mm

CORRECTNESS PROCEDURE

Updating to follow ISO13850: photos and accessories
Page 1: operating temp., min, actuation force and unlocking torque

This datasheet have been approved and can be officially released.

DATE AND SIGNATURE	DATE AND SIGNATURE
PRODUCT MANAGER	COMMUNICATION DEPARTMENT