YAT 206

Popular item

Dimensions

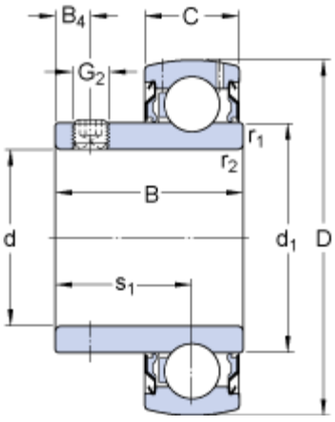

d		30	mm
D		62	mm
B		30.2	mm
C		18	mm
d_1	≈	39.7	mm
B_4		5	mm
$r_{1,2}$	min.	0.6	mm
s_1		21	mm

Calculation data

Basic dynamic load rating	C	19.5	kN
Basic static load rating	C_0	11.2	kN
Fatigue load limit	P_u	0.475	kN
Limiting speed [1)]		6300	r/min
Calculation factor	f_0	14	

Mass

Mass complete bearing		0.26	kg

Mounting information

Thread grub screw	G_2	M6x0.75	
Hexagonal key size for grub screw	N	3	mm
Recommended tightening torque for grub screw		4	N·m

Associated products

Rubber seating ring	RIS 206 A