A3120069

COM-KNOBS 20, without recess

Suitable for rotary potentiometer with round shaft ends according to DIN 41591. Collet system for convenient knob assembly from the front. Borehole with chamfer.
Max. torque: assembly = 1.0 Nm, function = 0.9 Nm.

Supply
1 COM-KNOB (without recess)



TECHNICAL DATA

Material	PA 6	Diameter	20 mm
Colour	nero	Height	16 mm
Standards	RoHS compliant, REACH compliant	Bore hole	6 mm

Please take the dimensions from current parts. These are subject to material- and manufacturing-specific tolerances.

PURCHASING DATA

Weight/1 part	6 g
Customs tariff number (OKW product)	84879090
Country of manufacture	Germany

CUSTOMISING OPTIONS

What else do you need to create your own personal product? We can supply our enclosures and tuning knobs fully modified to suit your electronic components and design requirements. Please advise for anything else we can do for you.

A3120069

COM-KNOBS 20, without recess

Customising options for A3120069



Machining



Printing



Laser marking



Installation / Assembly of accessories

A3120069

COM-KNOBS 20, without recess

SYSTEM COMPONENTS TO COMPLETE



A3220003
Cover 20
PA 6
coral



A3220004
Cover 20
PA 6
beach



A3220005
Cover 20
PA 6
lagoon



A3220006
Cover 20
PA 6
sky



A3220007
Cover 20
PA 6
mineral



A3220009
Cover 20
PA 6
nero

ACCESSORY "SCREWS"



A6207009
Round nut M7 x 0.75



A6210009
Round nut M10 x 0.75



A6295009
Round nut 3/8"-32G



A6300000
Spanner

ACCESSORY



A4420001
Dial 20
PC (UL 94 HB)
transparent



A4420010
Dial 20
PC (UL 94 HB)
transparent



A4420060
Dial 20
PC (UL 94 HB)
transparent



A6020019
Stator 20
Aluminium

A3120069

COM-KNOBS 20, without recess

Subject to technical modification without notice. © by OKW Gehäusesysteme, Buchen/Germany.

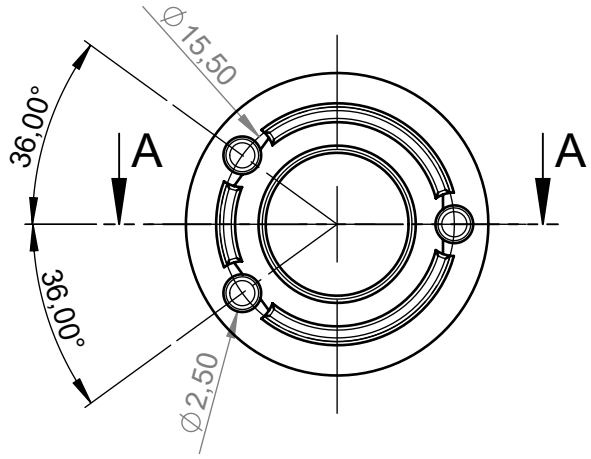

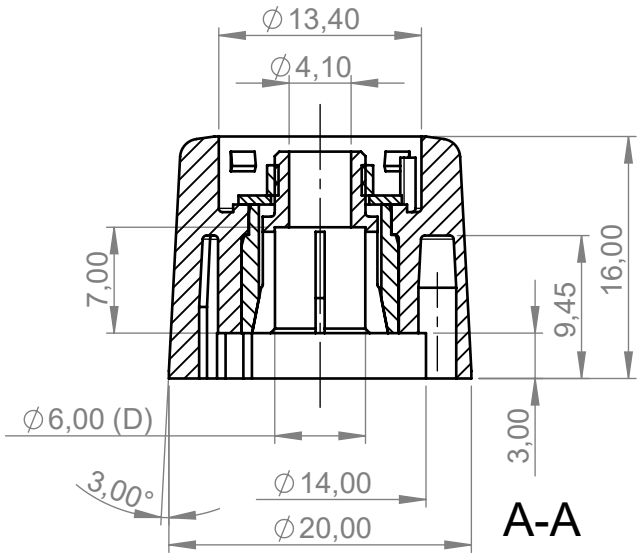

A-A

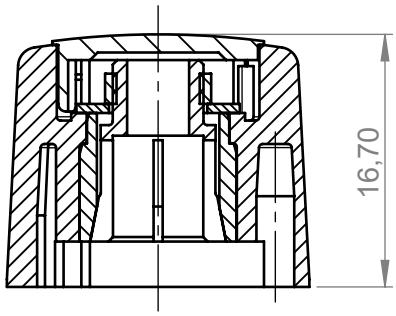

A-A

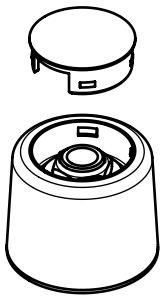

M 1:1

Bitte die Maße an aktuellen Teilen abnehmen.
Diese unterliegen material und produktionsspezifischen Fertigungstoleranzen

Please take the dimensions from current parts.
These are subject to material- and manufacutring-specific tolerances

Informationskopie
wird nicht aktualisiert
Copy for Information
will not be updated

Erst. am:	04.07.2012	Toleranzen:	Status:	
Erst. von:	D. Hasselbach	DIN 16901 T130	SERIENFREIGABE	
Freig. am:	20.09.2013	Volumen:	Zeichnungsart:	DIN 6 Teil 2
Freig. von:	D. Hasselbach		KUNDE	
Revision:	05			

This document contains proprietary information of OKW Gehäusesysteme GmbH and is tendered subject to the conditions that the information be retained in confidence not be reproduced or copied and not be used or incorporated in any product.

Technische Änderungen vorbehalten. Irrtümer oder Druckfehler begründen keinen Anspruch auf Schadenersatz. Wichtige Einbaumaße bitte direkt mit dem aktuellen Produkt abstimmen.

Subject to technical modification without prior notice. Typographical and other errors do not justify any claim for damages. All dimensions should be verified using an actual moulded part.

Sous reserve de modifications techniques. Toute erreur ou faute d'impression ne justife aucune demande d'indemnisation. Nous prions les clients de verifer les dimensions des composants avec les boitiers avant le montage.

OKW GEHÄUSE SYSTEME

COM-KNOBS 20
Borehole ø6 mm, with chamfer

A312006*

M 2:1

Für dieses Dokument behalten wir uns alle Urheberrechte vor. Es darf auch auszugsweise weder vervielfältigt noch Dritten in irgendeiner Form zugänglich gemacht werden.

Dateiname: 00010523