EN

Professionally approved products.

Datasheet

HDHDPORT-VGA

RS Stock number 706-7072



Description:

Display Port to VGA adapter, the adapter has a male Display Port plug to VGA female port to connect to VGA monitors.

Features and Specifications:

- Display Port v1.1 compliant
- High quality digital audio transmissions
- Embedded clock architecture to reduce EMI susceptibility
- Supports resolutions greater than QXGA (2048 x 1536) at 24-bit colour depths
- Supports existing VESA and CEA standards
- Supports hot plug detection as well as link status failure
- Supports a minimum of 1080P resolution at 24bpp, 50/60 Hz at 15 metres
- Supports Display Port signal to VGA signal
- Supports video bandwidth up to 10.8Gbps
- Connector : 20pin Display Port to 15pin VGA

RS, Professionally Approved Products, gives you professional quality parts across all products categories. Our range has been testified by engineers as giving comparable quality to that of the leading brands without paying a premium price.

Professionally approved products.

Datasheet

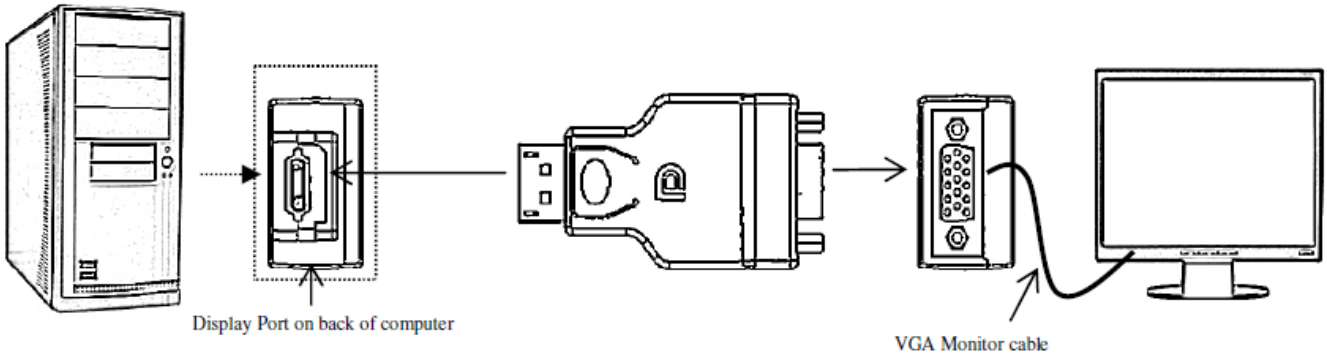

Signal Inputs/Output	
Maximum Single Link Range	1920X1200, 1080P
Video format supported	
VGA	Max to1920x1200
Operating Frequency	
Frequency	154MHz/144MHz
Vertical Frequency Range	60Hz
Video Amplifier Bandwidth	8bpc/10bpc
Mechanical	
Size(L×W×H)	116×39×20.5mm

RS, Professionally Approved Products, gives you professional quality parts across all products categories. Our range has been testified by engineers as giving comparable quality to that of the leading brands without paying a premium price.