DN1042

Switched-mode power supply 24 V DC

PSU-1AC/200-240VAC/24VDC-5A

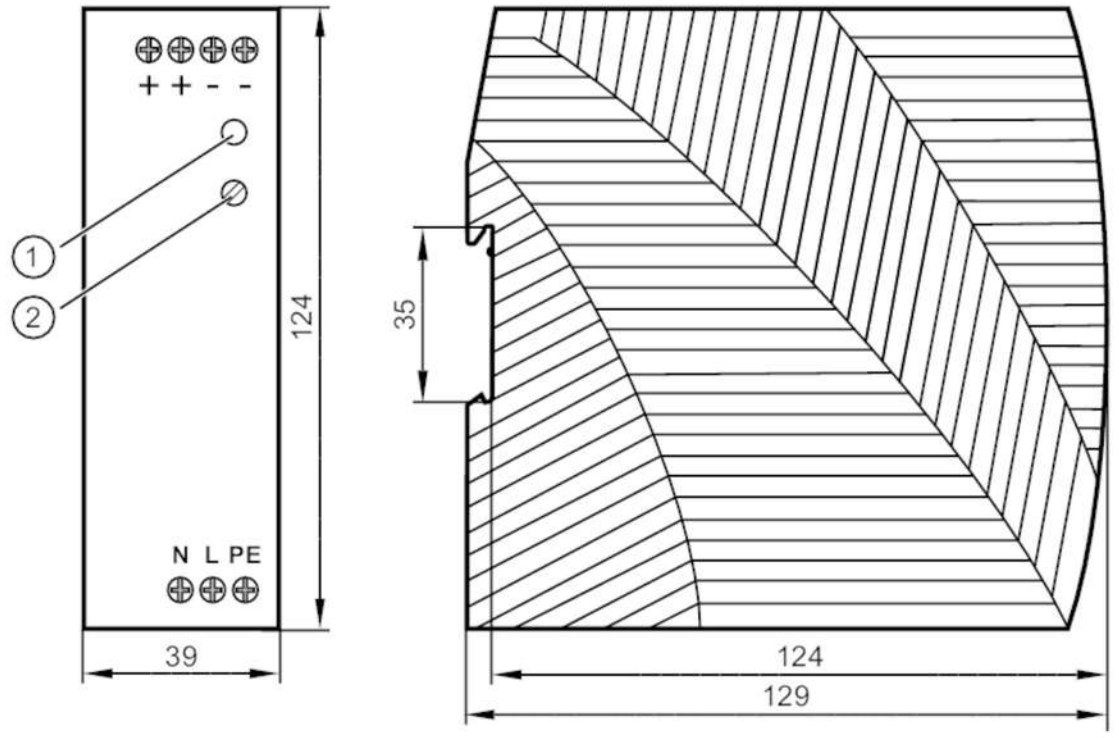

1 LED DC ok
2 potentiometer 24...28 V DC

Electrical data		
Frequency AC	[Hz]	47...63
Operating voltage tolerance	[%]	10
Nominal voltage AC	[V]	230
Input voltage range AC	[V]	200...240
Output voltage DC	[V]	24...28
Protection class		I; (IEC 61140)
Overvoltage protection		yes; (< 34 V DC)
Output voltage	[V]	adjustable; output voltage to SELV, PELV
Max. output current at min. output voltage	[A]	5
Max. output current at max. output voltage	[A]	4.3
Max. output current peak at min. output voltage	[A]	6
Max. output current peak at max. output voltage	[A]	5.1
Output power (permanent)	[W]	120
Power factor (nominal voltage 230 V AC / 50 Hz)		0.54
Number of output circuits		1
Max. residual ripple	[mV]	100

DN1042

Switched-mode power supply 24 V DC

PSU-1AC/200-240VAC/24VDC-5A

Switch-on peak current (nominal voltage 230 V AC / 50 Hz) [A]		28
Efficiency (nominal voltage 230 V AC / 50 Hz) [%]		90.5
External input protection		≤ B-10 A / ≤ C-6 A
Derating [W/K]		3 (55...70 °C)
Mains buffering time (nominal voltage 230 V AC / 50 Hz) [ms]		60
Input current (nominal voltage 230 V AC / 50 Hz) [A]		1.06
Power loss (nominal voltage 230 V AC / 50 Hz) [W]		12.6
Back feeding protection [V]		35
Outputs		
Short-circuit proof		yes
Overload protection		yes
Overload performance		output current constant
Parallel connection of outputs possible		no
Series connection of outputs possible		yes
Operating conditions		
Ambient temperature [°C]		-10...70
Note on ambient temperature		observe the free space for convection (see operating instructions)
Storage temperature [°C]		-40...85
Max. relative air humidity [%]		95; (IEC 60068-2-30)
Protection		IP 20; (EN 60529)
Pollution degree		2; (IEC 62103: conductive soiling not permitted)
Tests / approvals		
EMC	EN 61000-6-1	
	EN 61000-6-2	
	EN 61000-6-4	
Vibration resistance	IEC 60068-2-6	±1,6 mm 2...17,8 Hz / 2 g 17,8...500 Hz
Shock resistance	IEC 60068-2-27	30 g 6 ms / 20 g 11 ms
Mechanical data		
Weight [g]		372.5
Type of mounting		mounting on DIN rail; (TH35 (EN 60715))
Dimensions [mm]		124 x 39 x 129
Materials		PC
Displays / operating elements		
Display	DC ok	1 x LED
Remarks		
Remarks		Series connection of outputs only applies to identical units up to max. 150 V DC overall voltage
		UL 508 (Industrial Control Equipment)
Pack quantity		1 pcs.

DN1042

Switched-mode power supply 24 V DC

PSU-1AC/200-240VAC/24VDC-5A

Electrical connection

screw terminals:

Connection

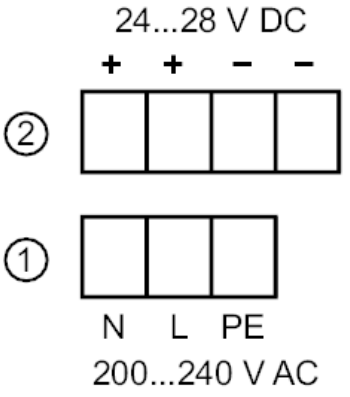

1: primary
2: secondary

Diagrams and graphs

block diagram

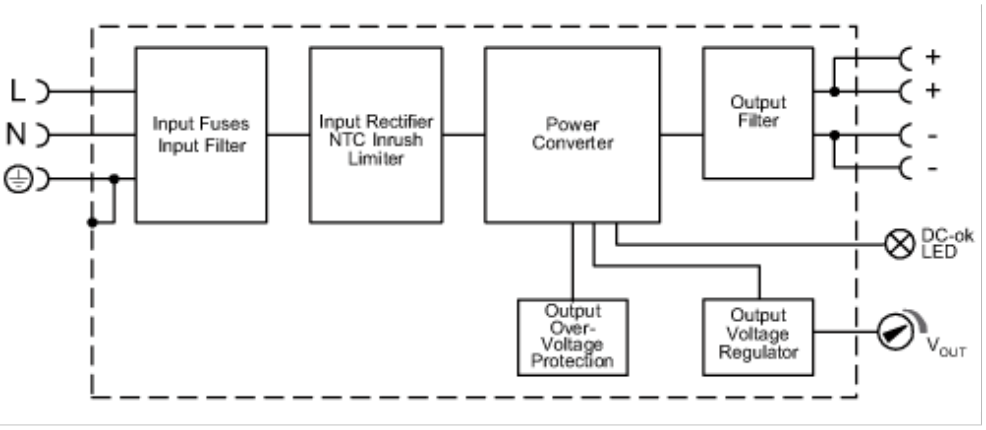

output characteristics

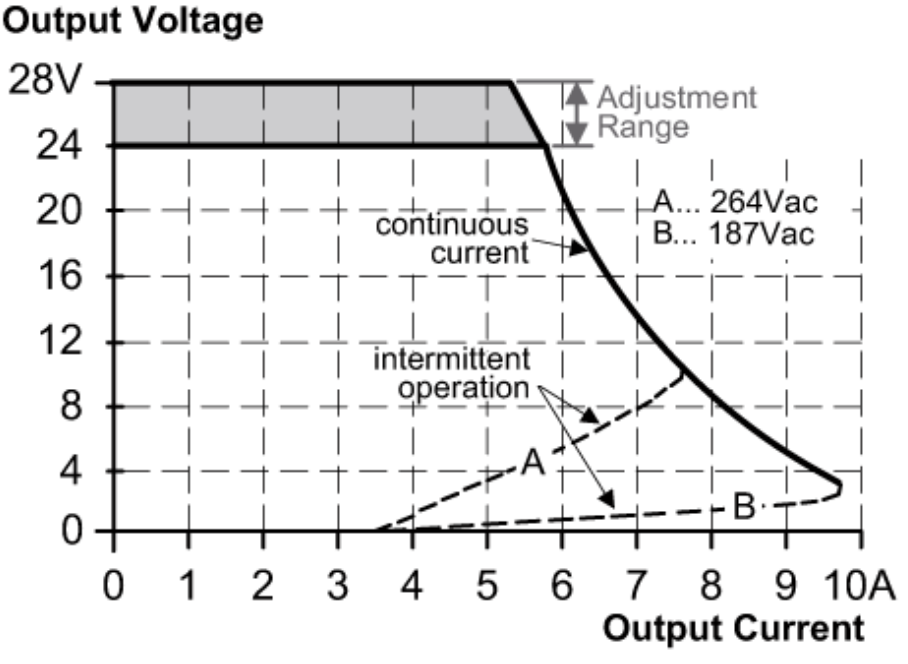

DN1042

Switched-mode power supply 24 V DC

PSU-1AC/200-240VAC/24VDC-5A

characteristic curve for degree of efficiency / power loss

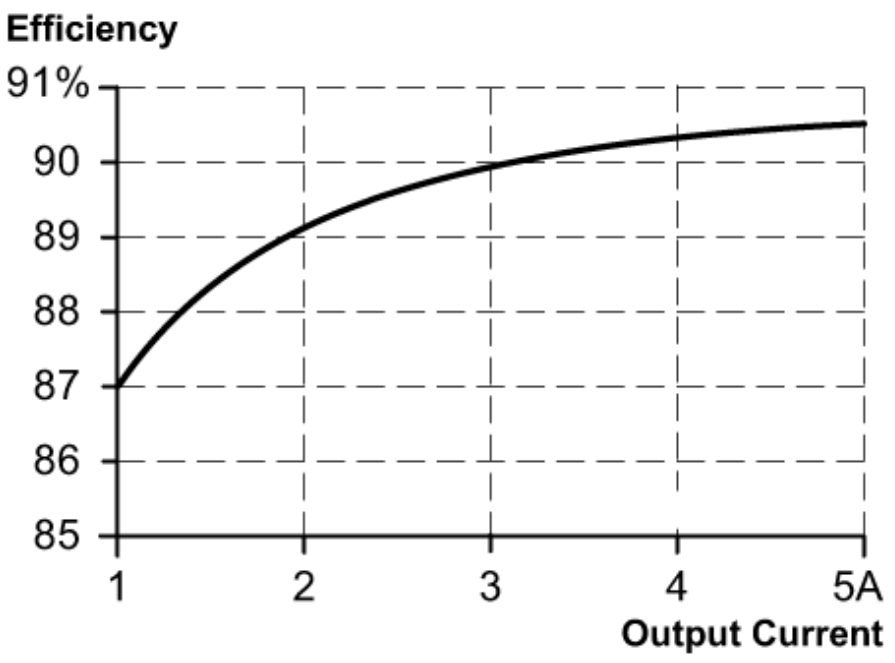

characteristic line for derating

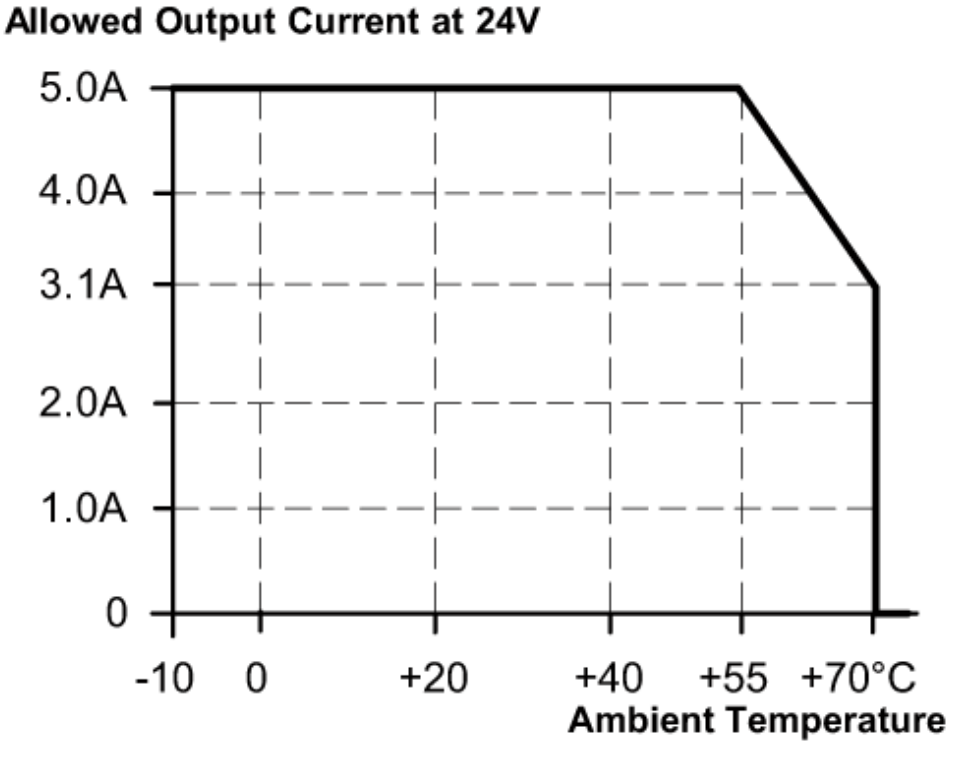

DN1042

Switched-mode power supply 24 V DC

PSU-1AC/200-240VAC/24VDC-5A

characteristic line for mains buffering time

