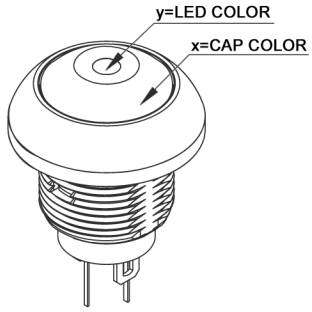

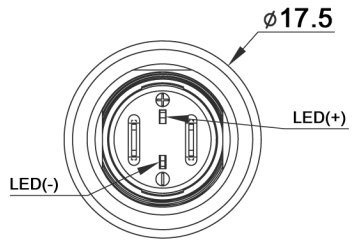

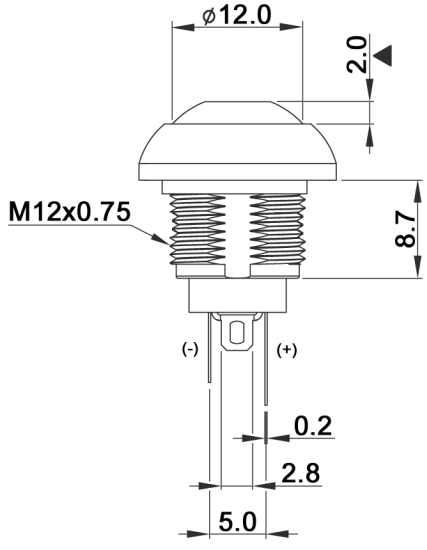

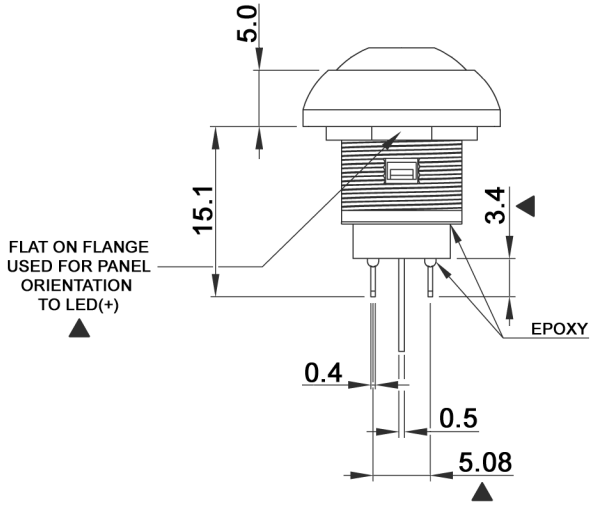

HARDWARE:

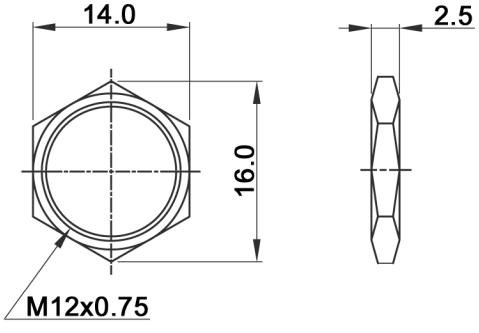

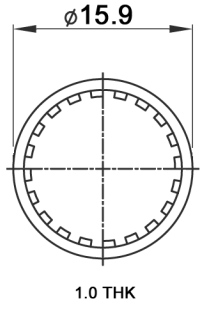

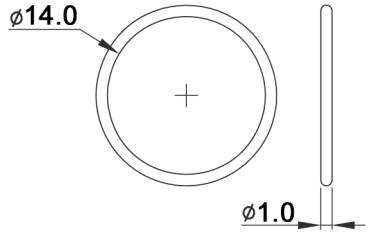

PANEL CUT-OUT

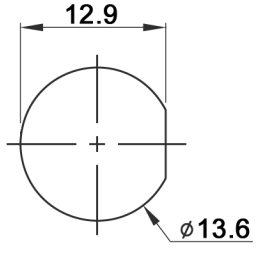

SWITCH FUNCTION

	POS. 1	POS. 2
Model No.		
DPWL 1 CG	OFF	MOM
Term. Conn.	OPEN	SHORT



Tolerances: 0.00: +0.25mm 0.0: +0.40mm			Date	Name
			01/14	dr
Modifications	Date	Name		

DPWL 1 CG D2D xy

knitter-switch

30 30 07

Page 1/2

Specifications:

Contact rating:	max.: 500mA, 48V AC; 200mA, 50V DC; 200mA, 250V AC
Contact resistance:	50mOhm max.
Insulation resistance:	1GOhm min. at 500V DC
Dielectric strength:	1500V AC RMS
Operating temperature:	-30°C to +85°C
Mechanical life:	1 000 000 cycles
Electrical life:	500 000 cycles
Operating force:	2N - 5N
Soldering conditions:	350°C max., 5sec.
Total travel:	1.5mm
Panel thickness:	1.5mm min. - 4.0mm max.
Contact bounce:	10ms
Torque:	1.5Nm max. applied to nut
Material:	Case: diallyl phthalate (DAP) (UL94V-0) Cap: polyamide 6/6 Bushing: zinc alloy, stain nickel plated Terminal / contacts: gold plated over silver
IP rating:	IP 67

X=CAP COLOR	
W	white
K	black
R	red
O	orange
Y	yellow
G	green
B	blue

Y=LED COLOR	
W	white
R	red
Y	yellow
G	green
B	blue
YG	yellow / green
YB	yellow / blue
YR	yellow / red
RG	red / green
RB	red / blue
GB	green / blue

Lens appearance	Colour	Electro-optical data (at 20mA)				Peak wavelength	Viewing angle
		Vf (V)		Iv (mcd)			
		Typ.	max.	Typ.	min.		
Water clear	super white	2.8	3.3	200.0	100.0	x=0.27 y=0.27	35°
	super red	2.0	2.5	700.0	200.0	645.0	
	yellow	2.1	2.6	100.0	55.0	589.0	
	green	2.2	2.7	130.0	70.0	565.0	
	super blue	3.1	3.6	580.0	250.0	460.0	
	super yellow	2.0	2.6	475.0	210.0	590.0	
	super green	2.0	2.6	210.0	140.0	570.0	
	super yellow	2.1	2.6	200.0	94.0	590.0	
	super blue	3.2	3.6	200.0	94.0	460.0	
	super yellow	2.1	2.6	100.0	63.0	590.0	
	super red	2.0	2.6	90.0	42.0	630.0	
	super red	2.0	2.6	90.0	42.0	630.0	
	super green	2.0	2.6	90.0	42.0	570.0	
	super red	2.0	2.6	90.0	42.0	630.0	
	super blue	3.2	3.6	200.0	94.0	460.0	
	super green	2.0	2.6	100.0	42.0	570.0	
	super blue	3.2	3.6	200.0	94.0	460.0	

RoHS-conform · 2002/95/EC

Tolerances: 0.00: +0.25mm 0.0: +0.40mm			Date	Name	DPWL 1 CG D2D xy
			01/14	dr	
			knitter-switch	30 30 07	Page 2/2
Modifications	Date	Name			