# E89067

## Mounting tube

**LED-Tower/Pole/800mm**

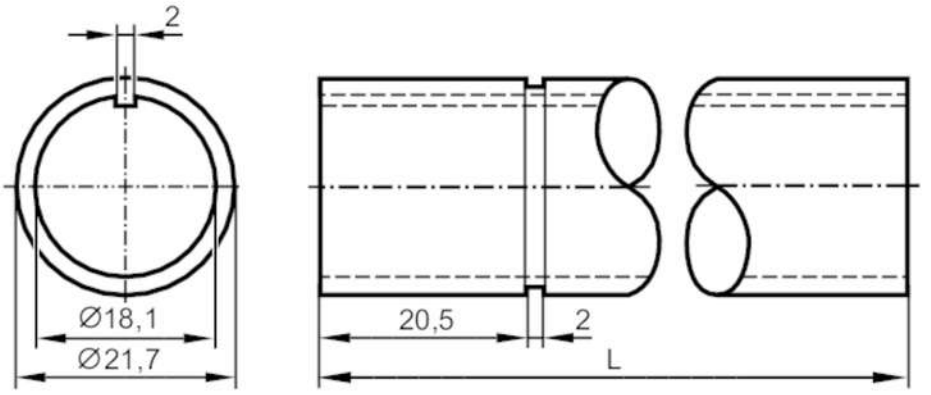


L: 800 mm

| Mechanical data | | |
|---|---|---|
| Weight | [g] | 244 |
| Dimensions | [mm] | Ø 21.7 / L = 800 |
| Materials | | aluminium black |
| Length L | [mm] | 800 |

| Accessories | |
|---|---|
| Accessories (optional) | mounting base:, E89060 |
| | wall bracket:, E89061 |
| | Mounting adapter:, E89063 |

| Remarks | |
|---|---|
| Pack quantity | 1 pcs. |

**Diagrams and graphs**

base mounting

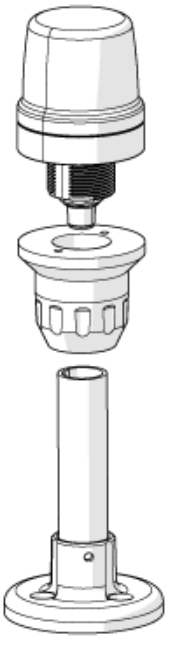

# E89067

## Mounting tube

**LED-Tower/Pole/800mm**

wall mounting

