

VE101 VE111
VE112 VE113

Natural frequency : 3,5 to 6 Hz (1)

See also PAULSTRA elastomer range : Traxiflex

DESCRIPTION

VE isolators have a cylindrical stainless steel spring, a galvanised body, an elastomer noise reduction guide and steel rings or studs depending on the model.
The VE112 series has a steel cushion inside the spring.

APPLICATIONS

These isolators with a natural frequency of between 3.5 and 6 Hz are specially designed for suspending false ceilings, air conditioning equipment and pipework and significantly reduces noise in buildings.

(1) Natural frequencies with max/min loads, see : OPERATING CHARACTERISTICS.

DIMENSIONS

VE101

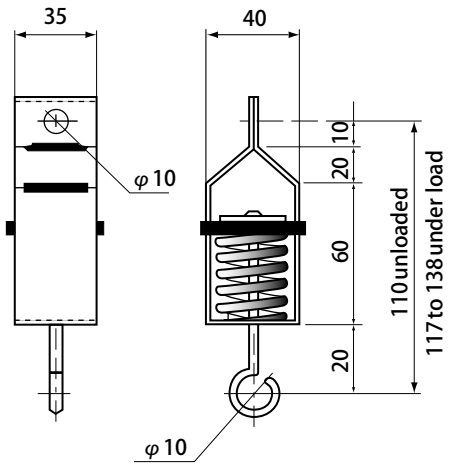

VE111

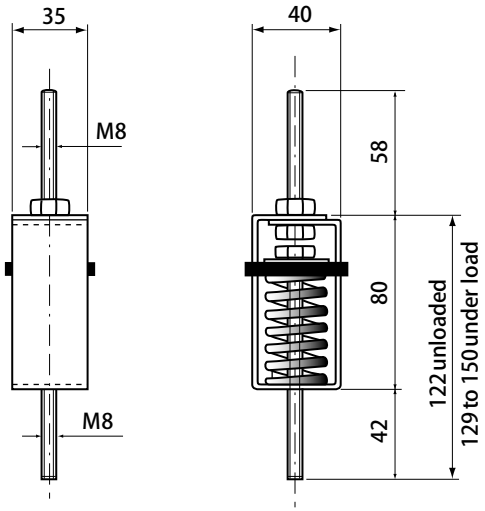

VE112

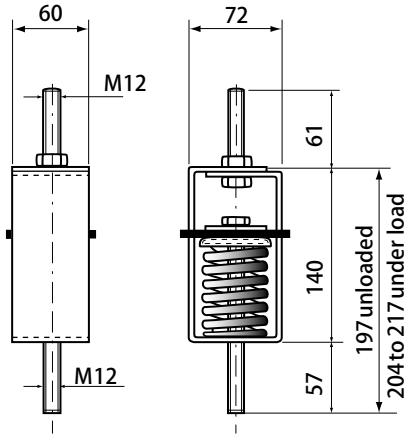

VE113

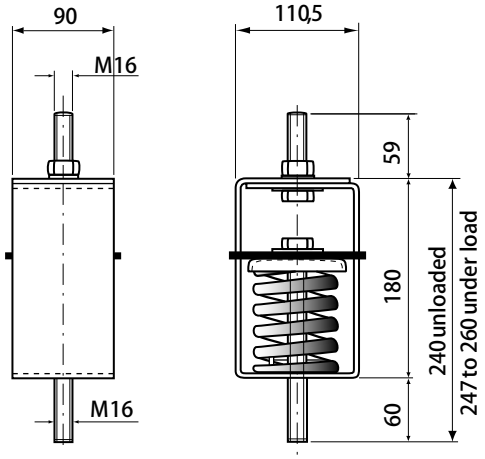

OPERATING CHARACTERISTICS

Reference	Static load (daN)
VE101 - 01	1 to 5
VE101 - 02	4 to 13
VE101 - 03	7 to 20
VE101 - 04	12 to 33
VE101 - 05	19 to 43

Reference	Static load (daN)
VE111 - 01	1 to 5
VE111 - 02	4 to 13
VE111 - 03	7 to 20
VE111 - 04	12 to 33
VE111 - 05	19 to 43

Reference	Static load (daN)
VE112 - 01	25 to 70
VE112 - 02	45 to 130
VE112 - 03	85 to 230

Reference	Static load (daN)
VE113	150 to 420

Vibration characteristics :

- Natural frequency : 3.5 to 6 Hz