EVF246

Connection cable

VDOAF030VAS0005P03STGH030VAS

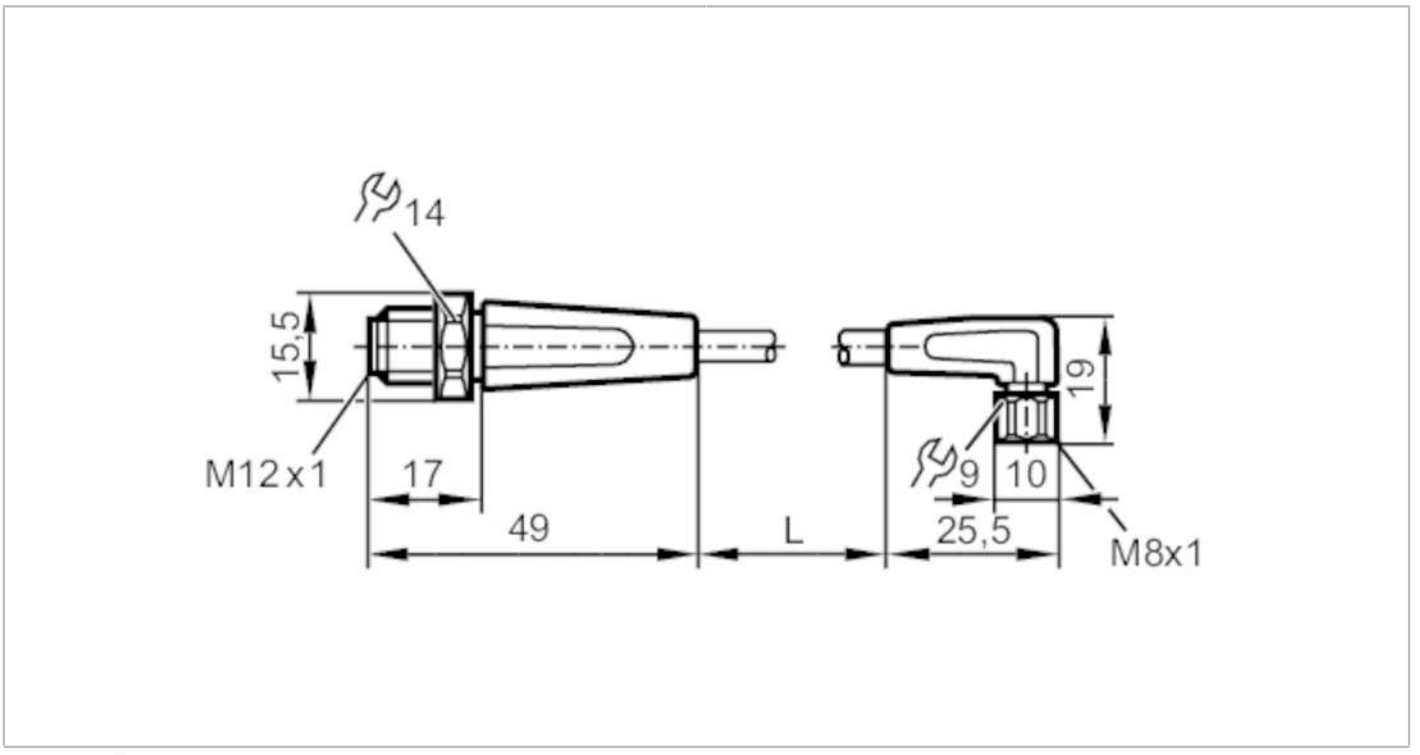

Application			
Special feature		Free from silicone; Halogen-free; Gold-plated contacts; Drag chain suitability	
Application		hygienic and wet areas in the food industry	
Free from silicone		yes	
Electrical data			
Operating voltage	[V]	< 50 AC / < 60 DC; (cULus: 30 AC / 30 DC)	
Protection class		III	
Max. current load total	[A]	3	
Operating conditions			
Ambient temperature	[°C]	-25...80	
Ambient temperature (moving)	[°C]	5...80	
Protection		IP 65; IP 67; IP 68; IP 69K	
Tests / approvals			
UL approval		power supply	Class 2
Mechanical data			
Weight	[g]	164.5	
Dimensions	[mm]	15.5 x 15.5 x 49	
Materials		housing: PP Halogen-free; Sealing: EPDM	
Material nut		stainless steel (1.4404 / 316L)	
Drag chain suitability		yes	

EVF246

Connection cable

VDOAF030VAS0005P03STGH030VAS

Drag chain suitability	bending radius for flexible use	min. 10 x cable diameter
	travel speed	max. 3.3 m/s for a horizontal travel length of 5 m and max. acceleration of 5 m/s²
	bending cycles	> 1 Mio.
	torsional strain	± 180 °/m

Remarks

Pack quantity	1 pcs.

Electrical connection - plug

Connector: 1 x M12, straight; coding: A; Locking: stainless steel (1.4404 / 316L); Contacts: gold-plated; Tightening torque: 0.6...1.5 Nm

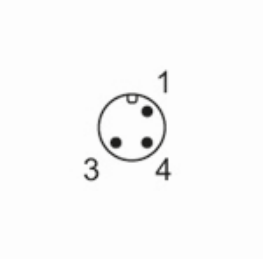

Electrical connection

Cable: 5.0 m, MPPE, Halogen-free, grey, Ø 4.9 mm; 3 x 0.34 mm² (42 x Ø 0.1 mm)

Connection

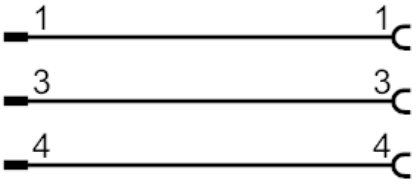

Electrical connection - socket

Connector: 1 x M8, angled; coding: A; Locking: stainless steel (1.4404 / 316L); Contacts: gold-plated; Tightening torque: 0.3...0.5 Nm

