Up to PL e of EN ISO 13849-1
P2HZ X1



Two-hand control unit for press controllers and safety circuits

Approvals

	P2HZ X1
c UL us LISTED	◆
	◆
	◆

Unit features

- Positive-guided relay outputs:
  - 3 safety contacts (N/O), instantaneous
  - 1 auxiliary contact (N/C), instantaneous
- 2 semiconductor outputs
- Connection options for:
  - 2 operator elements (buttons)
- LED indicator for:
  - Switch status channel 1/2
  - Supply voltage
- See order reference for unit types

Unit Description

The two-hand control relay meets the requirements of EN 574 Type IIIC. It forces the operator to keep his hands outside the danger zone area during the hazardous movement. The unit is suitable for use on controllers for metalworking presses as a component for simultaneous switching.
It can be used in applications with

- Mechanical presses (EN 692)
- Hydraulic presses (EN 693)
- Safety circuits in accordance with EN 60204-1

Safety features

The two-hand control relay meets the following safety requirements:

- The circuit is redundant with built-in self-monitoring
- The safety function remains effective in the case of a component failure
- The circuit prevents a further press stroke in the case of:
  - Relay failure
  - Contact welding
  - Coil defect on a relay
  - Open circuit
  - Short circuit

Block diagram

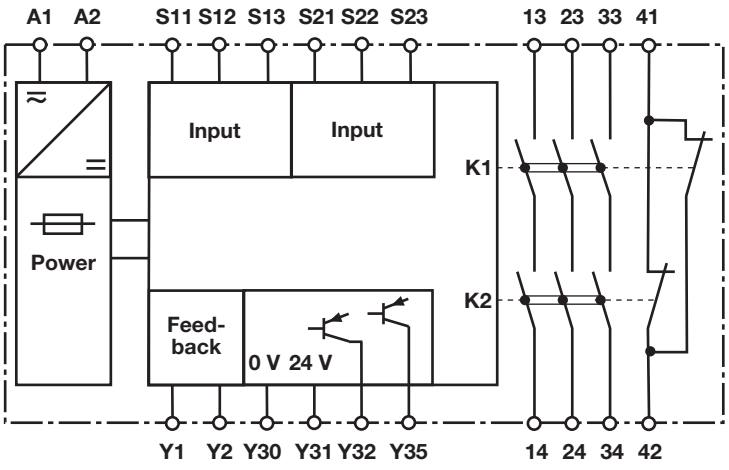

Up to PL e of EN ISO 13849-1
P2HZ X1

Function description

- The two-hand control relay must be activated by simultaneously pressing two buttons within **500 ms**. If one or both of the buttons are released, the unit interrupts the control command for the hazardous movement.
- Reactivation: The output relays will not re-energise until both operator elements have been released and then re-operated simultaneously.

Timing diagram

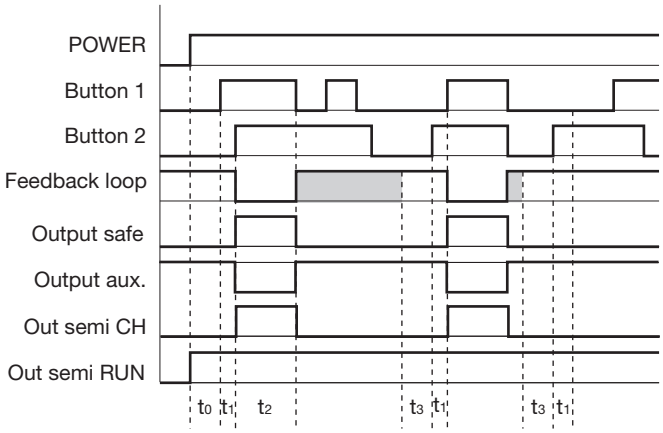

Key

- POWER: Supply voltage
- Button 1/Button 2: Input circuits S11-S12-S13, S21-S22-S23
- Feedback loop: Feedback loop Y1-Y2
- Output safe: Safety outputs 13-14, 23-24, 33-34
- Output aux: Auxiliary contacts 41-42
- Out semi RUN: Semiconductor output for operational readiness Y35
- Out semi CH: Semiconductor output switch status Y32
- t_0: Recovery time after power on
- t_1: Simultaneity, channel 1 and 2
- t_2: Operating cycle ended through button 1 or 2
- t_3: Y1-Y2 must be closed before before the button is operated (recovery time)

Shaded area: Status irrelevant

Wiring

Please note:

- Information given in the “Technical details” must be followed.
- Outputs 13-14, 23-24, 33-34 are safety contacts, output 41-42 is an auxiliary contact (e.g. for display).
- To prevent contact welding, a fuse should be connected before the output contacts (see technical details).
- Calculation of the max. cable runs I_{max} in the input circuit:

$$I_{max} = \frac{R_{lmax}}{R_l / km}$$

R_{lmax} = max. overall cable resistance (see technical details)
R_l /km = cable resistance/km

- Use copper wire that can withstand 60/75 °C.
- Sufficient fuse protection must be provided on all output contacts with capacitive and inductive loads.

Pilz GmbH & Co. KG, Felix-Wankel-Straße 2, 73760 Ostfildern, Germany
Telephone: +49 711 3409-0, Telefax: +49 711 3409-133, E-Mail: pilz.gmbh@pilz.de

Up to PL e of EN ISO 13849-1
P2HZ X1

Preparing for operation

- Supply voltage

Supply voltage	AC	DC
	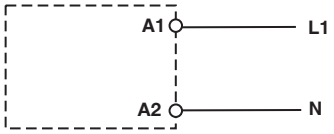	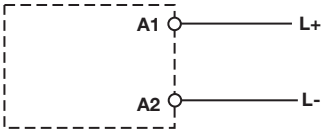

- Input circuit

Input circuit	Single-channel	Dual-channel
Two-hand button **with** detection of shorts across contacts	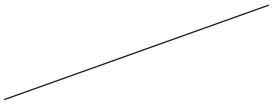	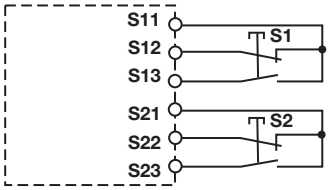

- Feedback loop

Feedback loop	
Contacts from external contactors	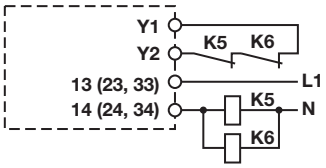

- Semiconductor output

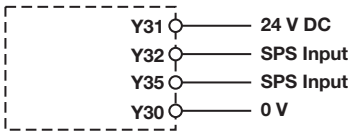

- Key

S1/S2	Two-hand button

Up to PL e of EN ISO 13849-1
P2HZ X1

Terminal configuration

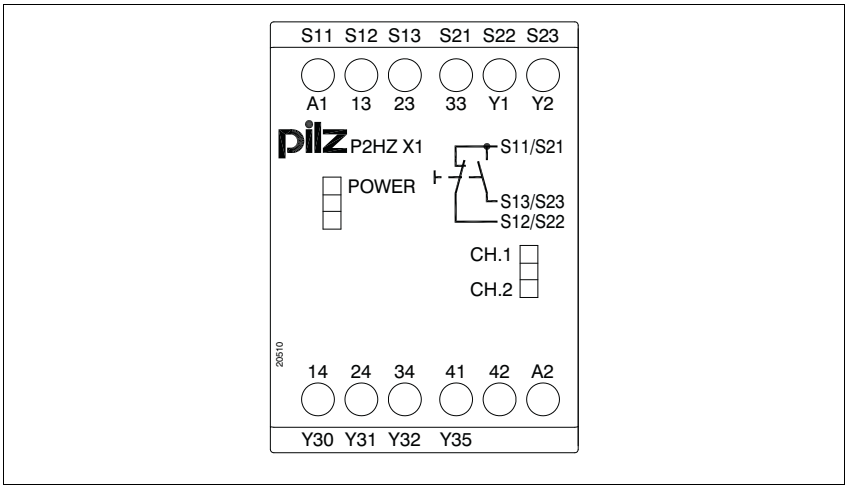

Installation

- The safety relay should be installed in a control cabinet with a protection type of at least IP54.
- Use the notch on the rear of the unit to attach it to a DIN rail.
- Ensure the unit is mounted securely on a vertical DIN rail (35 mm) by using a fixing element (e.g. retaining bracket or an end angle).

Notice
The distance of the button connected to the two-hand relay from the nearest danger zone must be large enough that if one of the buttons is released, the dangerous moment is interrupted before the operator can reach into the danger zone (see EN 999 “The positioning of protective equipment in respect of approach speeds of parts of the human body”).

Dimensions

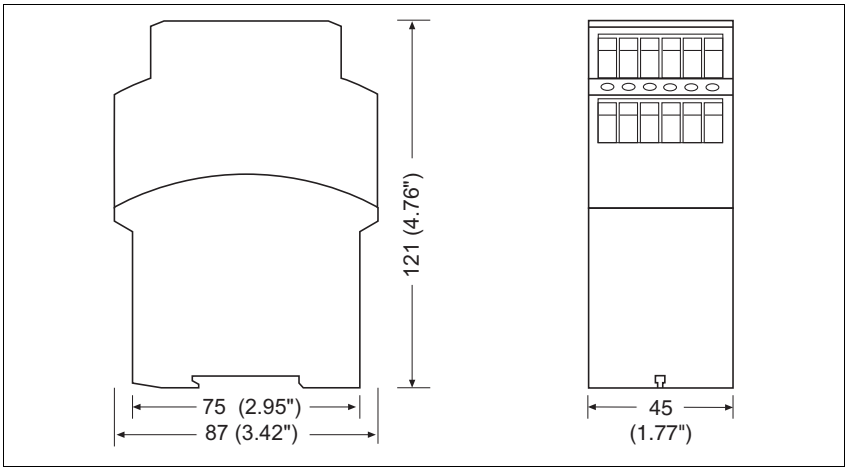

Up to PL e of EN ISO 13849-1
P2HZ X1

Notice

This data sheet is only intended for use during configuration. Please refer to the operating manual for installation and operation.

Service life graph

The service life graphs indicate the number of cycles from which failures due to wear must be expected. The wear is mainly caused by the electrical load; the mechanical load is negligible.

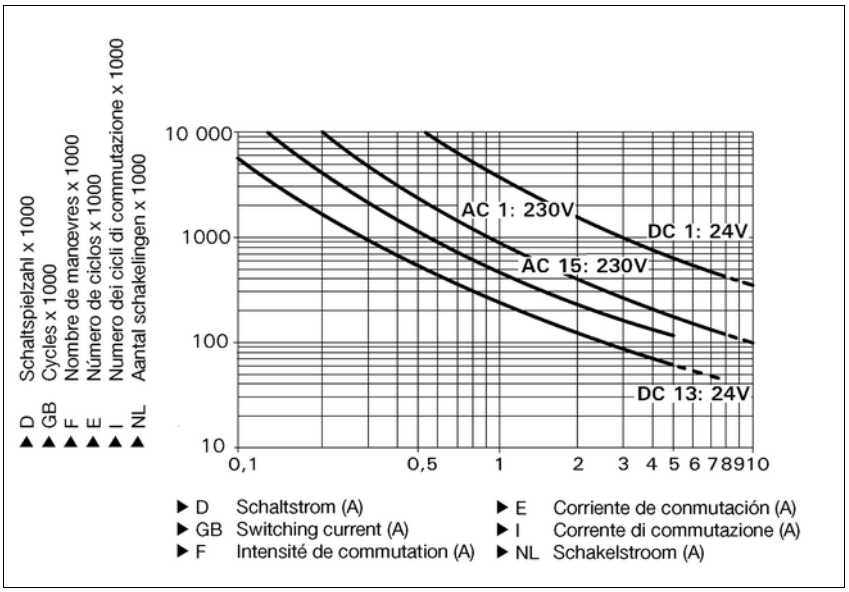

Example
- Inductive load: 0,2 A
- Utilisation category: AC15
- Contact service life: 4,000,000 cycles

Provided the application requires fewer than 4,000,000 cycles, the PFH value (see technical details) can be used in the calculation.

To increase the service life, sufficient spark suppression must be provided on all output contacts. With capacitive loads, any power surges that occur must be noted. With contactors, use freewheel diodes for spark suppression.

Technical details

Electrical data	
Supply voltage	
Supply voltage U_B AC	**24 V**, **42 V**, **48 V**, **110 V**, **115 V**, **120 V**, **230 V**, **240 V**
Supply voltage U_B DC	**24 V**, **26 V**
Voltage tolerance	**-15 %/+10 %**
Power consumption at U_B AC	**6.0 VA** No. 774330, 774331, 774332, 774434, 774435, 774436, 774438, 774439
Power consumption at U_B DC	**2.5 W** No. 774340, 774341
Frequency range AC	**50 - 60 Hz**
Residual ripple DC	**10 %** No. 774340, 774341
Voltage and current at	
Input circuit DC: **24.0 V**	
N/O contact	**30 mA**
N/C contact	**20 mA**
Feedback loop DC: **24.0 V**	**45.0 mA**

Up to PL e of EN ISO 13849-1
P2HZ X1

Electrical data	
Number of output contacts	
Safety contacts (S) instantaneous:	**3**
Auxiliary contacts (N/C):	**1**
Utilisation category in accordance with **EN 60947-4-1**	
Safety contacts: AC1 at **240 V**	I_{min}: **0.01 A** , I_{max}: **5.0 A** P_{max}: **1250 VA**
Safety contacts: DC1 at **24 V**	I_{min}: **0.01 A** , I_{max}: **5.0 A** P_{max}: **125 W**
Auxiliary contacts: AC1 at **240 V**	I_{min}: **0.01 A** , I_{max}: **2.0 A** P_{max}: **500 VA**
Auxiliary contacts: DC1 at **24 V**	I_{min}: **0.01 A** , I_{max}: **2.0 A** P_{max}: **50 W**
Utilisation category in accordance with **EN 60947-5-1**	
Safety contacts: AC15 at **230 V**	I_{max}: **2.5 A**
Safety contacts: DC13 at **24 V** (6 cycles/min)	I_{max}: **1.5 A**
Auxiliary contacts: AC15 at **230 V**	I_{max}: **2.0 A**
Auxiliary contacts: DC13 at **24 V** (6 cycles/min)	I_{max}: **1.5 A**
Conventional thermal current	**5.0 A**
Contact material	**AgSnO2 + 0.2µ Au**
External contact fuse protection (I_K = 1 kA) to **EN 60947-5-1**	
Blow-out fuse, quick	
Safety contacts:	**6 A**
Auxiliary contacts:	**4 A**
Blow-out fuse, slow	
Safety contacts:	**4 A**
Auxiliary contacts:	**2 A**
Circuit breaker 24 VAC/DC, characteristic B/C	
Safety contacts:	**4 A**
Auxiliary contacts:	**2 A**
Semiconductor outputs (short circuit proof)	**24.0 V** DC, **20 mA**
External supply voltage	**24.0 V** DC
Voltage tolerance	**-15% / +10%**
Max. overall cable resistance R_{lmax} per input circuit	**14 Ohm**
Safety-related characteristic data	
PL in accordance with **EN ISO 13849-1: 2006**	**PL e** (**Cat. 4**)
Category in accordance with **EN 954-1**	**Cat. 4**
SIL CL in accordance with **EN IEC 62061**	**SIL CL 3**
PFH in accordance with **EN IEC 62061**	**3.01E-09**
SIL in accordance with **IEC 61511**	**SIL 3**
PFD in accordance with **IEC 61511**	**3.24E-06**
T_M [year] in accordance with **EN ISO 13849-1: 2006**	**20**
Times	
Delay-on de-energisation (reaction time in accordance with EN 574)	
N/O contact	**15 ms**
N/C contact	**30 ms**
Recovery time	**250 ms**
Simultaneity, channel 1 and 2	**500 ms**
Environmental data	
EMC	**EN 60947-5-1**, **EN 61000-6-2**
Vibration to **EN 60068-2-6**	
Frequency	**10.0 - 55.0 Hz**
Amplitude	**0.35 mm**
Climatic suitability	**EN 60068-2-78**
Airgap creepage in accordance with **EN 60947-1**	
Pollution degree	**2**
Overvoltage category	**III**

Up to PL e of EN ISO 13849-1
P2HZ X1

Environmental data	
Rated insulation voltage	**250 V**
Rated impulse withstand voltage	**4.00 kV**
Ambient temperature	**-25 - 55 °C**
Storage temperature	**-40 - 85 °C**
Protection type	
Mounting (e.g. cabinet)	**IP54**
Housing	**IP40**
Terminals	**IP20**
Mechanical data	
Housing material	
Housing	**PPO UL 94 V0**
Front	**ABS UL 94 V0**
Cross section of external conductors with screw terminals	
1 core flexible	**0.20 - 4.00 mm² , 24 - 10 AWG**
2 core, same cross section, flexible:	
with crimp connectors, without insulating sleeve	**0.20 - 2.50 mm² , 24 - 14 AWG**
without crimp connectors or with TWIN crimp connectors	**0.20 - 2.50 mm² , 24 - 14 AWG**
Torque setting with screw terminals	**0.60 Nm**
Dimensions	
Height	**87.0 mm**
Width	**45.0 mm**
Depth	**121.0 mm**
Weight	**280 g** No. 774340, 774341 **380 g** No. 774330, 774331, 774332, 774434, 774435, 774436, 774438, 774439

No. stands for order number.

It is essential to consider the relay's service life graphs. The relay outputs' safety-related characteristic data is only valid if the values in the service life graphs are met.

The PFH value depends on the switching frequency and the load on the relay output.
If the service life graphs are not accessible, the stated PFH value can be used irrespective of the switching frequency and the load, as the PFH value already considers the relay's B10d value as well as the failure rates of the other components.

All the units used within a safety function must be considered when calculating the safety characteristic data.

INFORMATION
A safety function's SIL/PL values are **not** identical to the SIL/PL values of the units that are used and may be different. We recommend that you use the PAScal software tool to calculate the safety function's SIL/PL values.

The standards current on **2010-07** apply.

Up to PL e of EN ISO 13849-1
P2HZ X1

Order reference

Type	Features	Terminals	Order no.
P2HZ X1	24 VAC	Screw terminals	774 330
P2HZ X1	42 VAC	Screw terminals	774 331
P2HZ X1	48 VAC	Screw terminals	774 332
P2HZ X1	110 VAC	Screw terminals	774 434
P2HZ X1	115 VAC	Screw terminals	774 435
P2HZ X1	120 VAC	Screw terminals	774 436
P2HZ X1	230 VAC	Screw terminals	774 438
P2HZ X1	240 VAC	Screw terminals	774 439
P2HZ X1	24 VDC	Screw terminals	774 340
P2HZ X1	26 VDC	Screw terminals	774 341