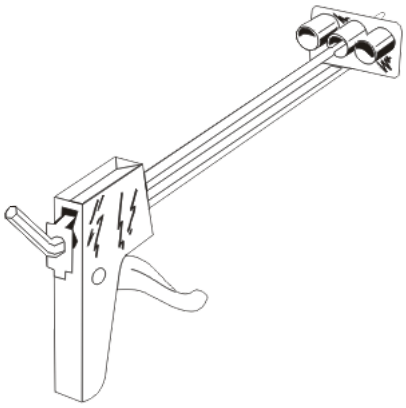

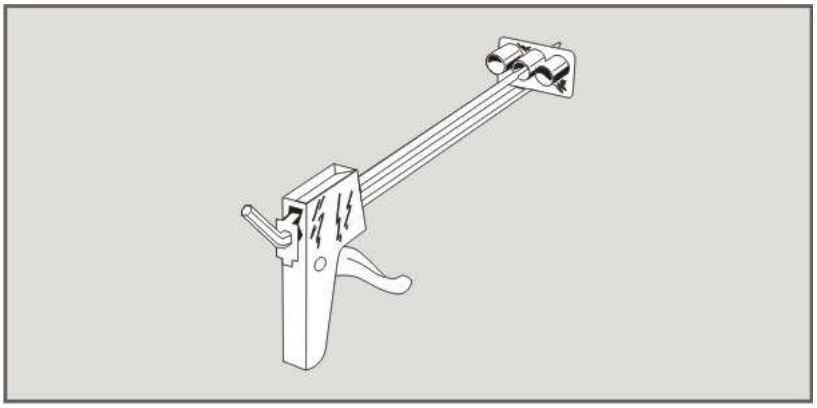

XMMJ 6

Name	Pin insert tool
Product Group(s)	X85
Configurable	No
Pack Size	1
Class	A
Weight	0.72
Unit	PCE
Catalogue	
Chain guide	
Spare parts	