THE INFORMATION CONTAINED IN THIS DRAWING IS THE SOLE PROPERTY OF L-COM, INC. ANY REPRODUCTION IN PART OR WHOLE WITHOUT THE WRITTEN PERMISSION OF L-COM, INC. IS PROHIBITED.

REVISIONS			
REV	DESCRIPTION	DATE	APPROVED
A	INITIAL RELEASE	06/03/2004	DFRISIELLO
B	ECN 2427: ADDED KIT CONTENTS	05/30/2006	DFRISIELLO
C	ECN 6881: UPD DWG FORMAT, PACKAGING, AND LOGO	06/18/2013	DFRISIELLO
D	ECN 9328: REPLACE MJS110C5E-S WITH MJ110C5E-S, UPDATE ROHS, FORMAT	07/31/2018	DFRISIELLO

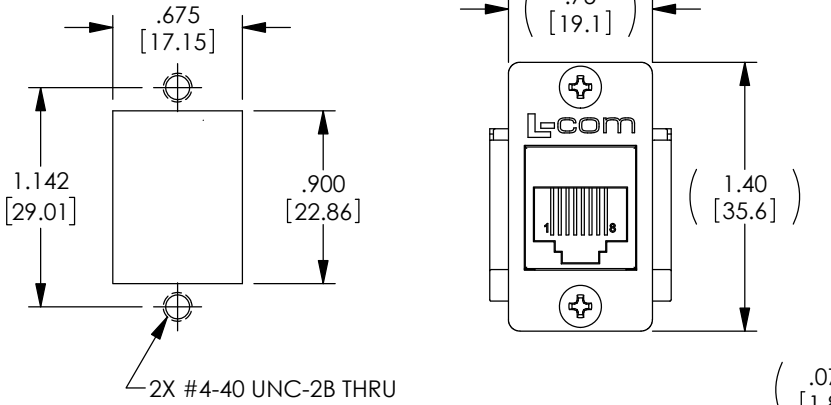

RECOMMENDED PANEL OPENING

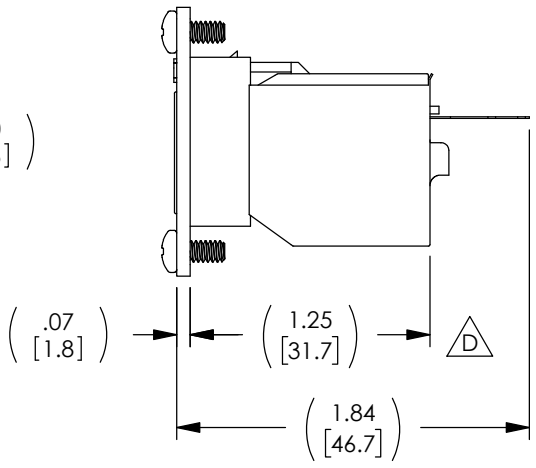

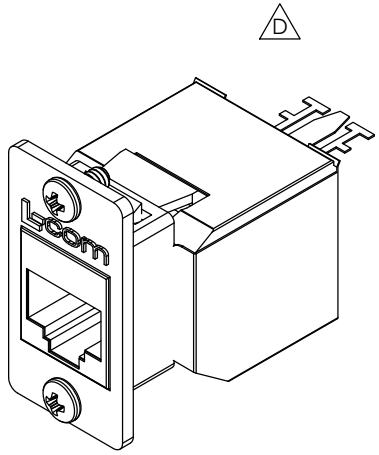

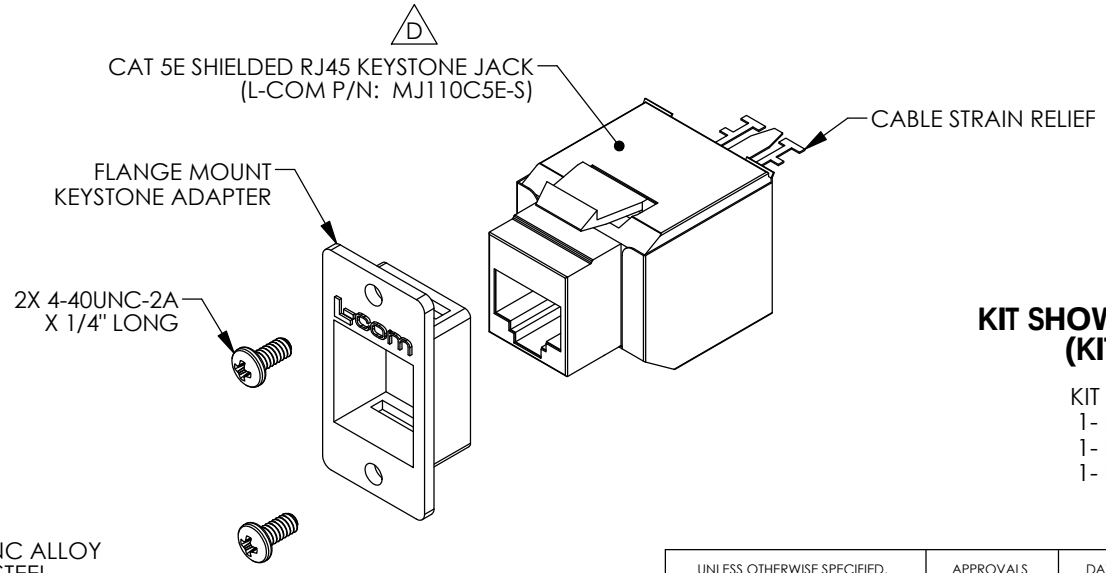

KIT SHOWN FULLY ASSEMBLED FOR CLARITY
(KIT IS SHIPPED UN-ASSEMBLED)

KIT INCLUDES:
1- KEYSTONE JACK
1- FLANGE ADAPTOR
1- PACKAGE MOUNTING SCREWS (4-40x 1/4")

NOTES:

MATERIAL:
FLANGED ADAPTOR: ZINC ALLOY
HARDWARE: STAINLESS STEEL.

FINISH:
FLANGED ADAPTOR: NICKEL PLATE.

PACKAGING:
KITS SHALL BE INDIVIDUALLY PACKAGED IN ACCORDANCE WITH L-COM PACKAGING SPECIFICATION PS-0031.

REGULATORY COMPLIANCE:
CE2011/65/EU(RoHS DIRECTIVE)

UNLESS OTHERWISE SPECIFIED,
DIMENSIONS ARE IN INCHES [mm]
OVERALL CABLE LENGTH TOLERANCE:
≤12 [305] = +1 [25] / -0
>12 [305] ≤60 [1524] = +2 [51] / -0
>60 [1524] ≤120 [3048] = +4 [102] / -0
>120 [3048] ≤300 [7620] = +6 [152] / -0
>300 [7620] = +5% / -0%
ALL OTHER DIMENSIONAL TOLERANCES:
.X = ± .2 [5.08]
.XX = ± .02 [.51]
.XXX = ±.005 [.13]
PROJECTION

APPROVALS	DATE
DRAWN BY DFRISIELLO	06/03/2004
CHECKED BY DGUTTADAURO	06/03/2004
APPROVED BY DGUTTADAURO	06/03/2004

CONFIGURATION DETAILS OF UNDIMENSIONED FEATURES MAY VARY
COLOR VARIATIONS MAY OCCUR

L-COM Global Connectivity
50 HIGH STREET
NORTH ANDOVER, MA
01845

CATEGORY
TELECOM/MODULAR

PRODUCT DESCRIPTION
JACK RJ45/110 FLNG SHLD

SIZE	FSCM NO.	DWG. NO.	REV.
A	43321	ECF110C5E-S	D

SCALE: NONE | CAD FILE: ECF110C5E-S.SLDDRW | SHEET 1 OF 1