E12586

Spacer

SPACER FOR MN5xxS/E1104S

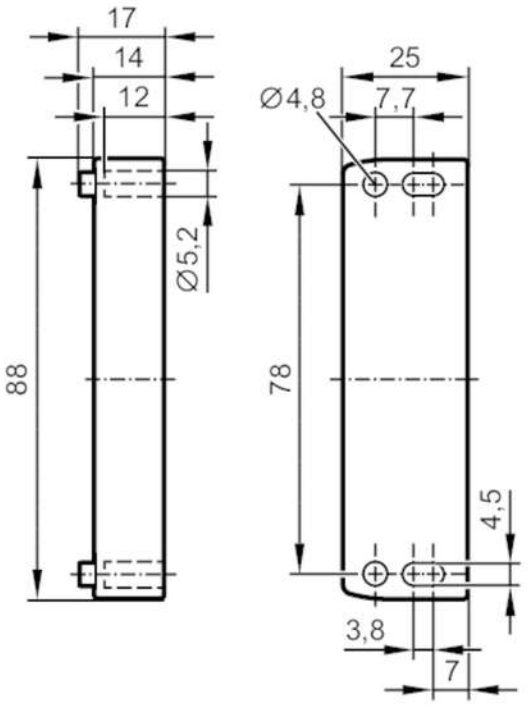

Application		
Application		for safety-related applications
Installation		for magnetic sensor MN5; for mounting on ferromagnetic metal
Operating conditions		
Ambient temperature	[°C]	-25...80
Mechanical data		
Weight	[g]	48
Materials		PA
Remarks		
Pack quantity		1 pcs.