Briton

376 Series Panic and Emergency Exit Hardware



Ingersoll Rand

Briton 376 Series

The Briton 376 Panic and Emergency Exit Hardware Series has been designed to provide immediate escape at all times. Recently updated with a new stylish look, the Briton 376 Series still incorporates all the features and benefits expected from a panic exit device that is branded **Briton**.

The range, comprising of the following variants, is fully compliant to EN 1125:2008 or EN 179:2008, is CE marked to the latest standards and comes complete with a 5 year warranty:

- Vertical panic bolts
- Reversible rim panic latches
- Mortice panic nightlatches
- Push pad vertical bolts
- Reversible push pad rim panic latches

5 YEAR GUARANTEE

CE





Briton Testing and CE Marking

When lives may depend on an exit device we feel we have a responsibility to design and test our products to exceed all current performance and safety standards, ensuring they will operate first time, every time.

Rigorous testing is continually being carried out on the Briton range of exit hardware providing peace of mind for specifiers, distributors, installers and users.

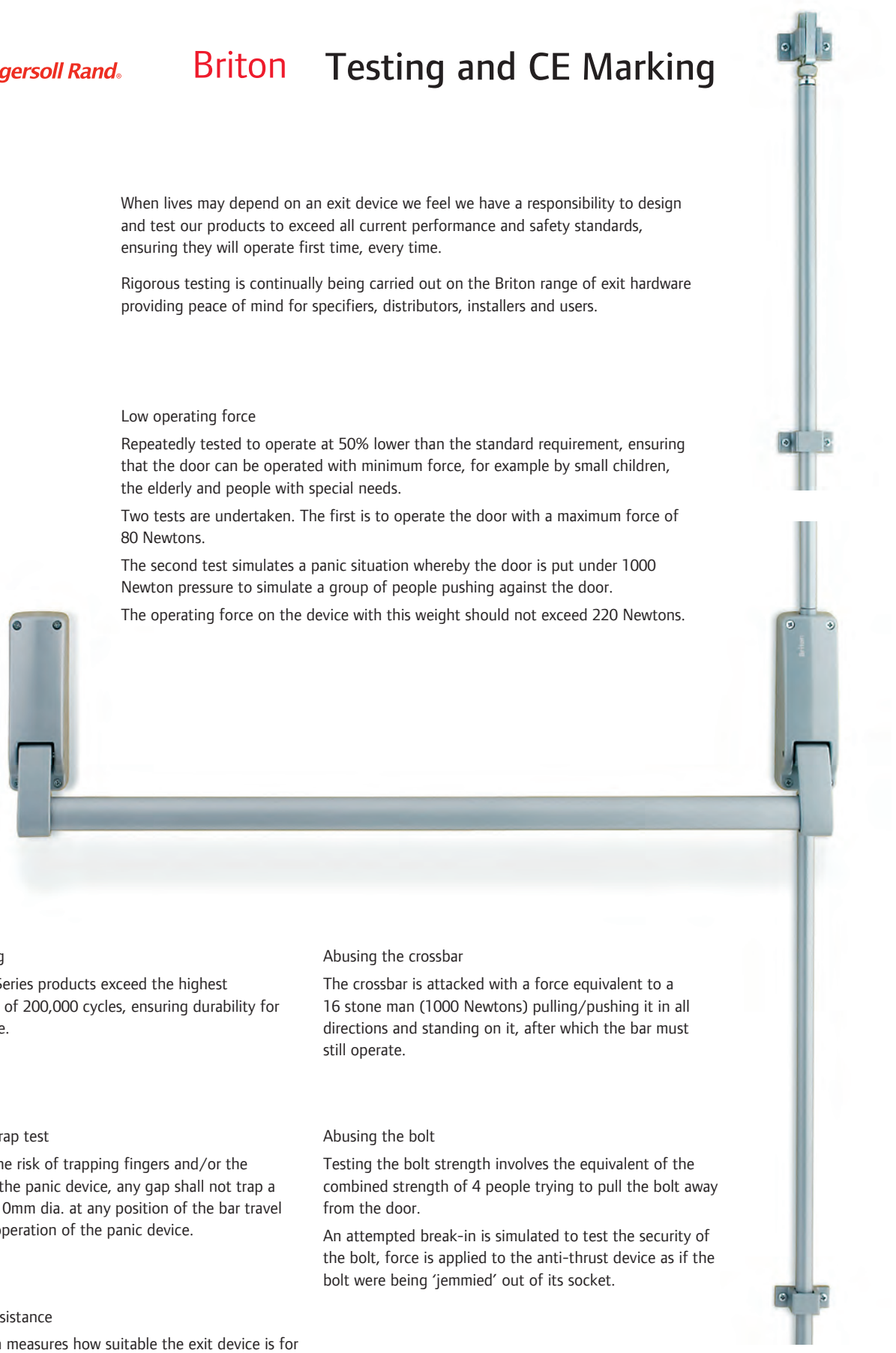

Low operating force

Repeatedly tested to operate at 50% lower than the standard requirement, ensuring that the door can be operated with minimum force, for example by small children, the elderly and people with special needs.

Two tests are undertaken. The first is to operate the door with a maximum force of 80 Newtons.

The second test simulates a panic situation whereby the door is put under 1000 Newton pressure to simulate a group of people pushing against the door.

The operating force on the device with this weight should not exceed 220 Newtons.

Cycle testing

Briton 376 Series products exceed the highest requirement of 200,000 cycles, ensuring durability for everyday use.

Abusing the crossbar

The crossbar is attacked with a force equivalent to a 16 stone man (1000 Newtons) pulling/pushing it in all directions and standing on it, after which the bar must still operate.

The finger trap test

To reduce the risk of trapping fingers and/or the blocking of the panic device, any gap shall not trap a test rod of 10mm dia. at any position of the bar travel during the operation of the panic device.

Abusing the bolt

Testing the bolt strength involves the equivalent of the combined strength of 4 people trying to pull the bolt away from the door.

An attempted break-in is simulated to test the security of the bolt, force is applied to the anti-thrust device as if the bolt were being 'jemmied' out of its socket.

Corrosion resistance

A test which measures how suitable the exit device is for varying environmental conditions. All Briton 376 Series hardware has been tested to EN 1670 Building Corrosion Requirements and has achieved at least grade 3 (high resistance). This ensures the product will function correctly in wet, polluted and exterior environments. Note, EN 1670 test does not relate to the finish.

Briton Testing and CE Marking



CE

From 1st January 2010 it is mandatory for manufacturers to mark all panic and emergency exit devices with the new CE classification to prove compliance with the latest standards.

There are 3 ways to be sure exit hardware meets the CE mark criteria:

1. - CE certificates are readily available for inspection.

2. - Products are regularly tested within a UKAS accredited testing facility as part of an ongoing audit test programme.

3. - Products are manufactured on a production line that has been inspected and accredited under FPC (Factory Process Control) conditions, a further requirement of the CE marking process. This ensures that correctly specified materials and manufacturing methods are consistently employed.



EN Classification Codes

Under both standards (EN 1125 and EN 179), each product is classified and graded to identify the level of compliance within each category. These classifications are set out below with the additional element of 'Field of Door Application' introduced in the 2008 edition of EN 1125 and EN 179 shown highlighted.

3 (3) — Category of use

Class 3 = high frequency of use by public and others with little incentive to exercise care.

7 (6/7) — Durability (Cycle Testing)

Grade 6 - 100,000 cycles
Grade 7 - 200,000 cycles

6 (5-7) — Door size/mass

Class 5 - doors up to 100kg
Class 6 - doors up to 200kg.
Class 7 - doors over 200kg.

B (0/A/B) — Fire Resistance (EN 1634)

Grade 0 - not approved for fire/smoke door use
Grade A - approved for smoke door assemblies
Grade B - approved for use on fire & smoke door assemblies

1 (1) — Safety

All panic and emergency devices have a critical safety function therefore only grade 1 is identified.

3 (3/4) — Corrosion Resistance (EN 1670)

Grade 3 - high resistance
Grade 4 - very high resistance.

2 (2-5) — Security

EN 1125 - Grade 2 - up to 1000N.
EN 179 - Grade 2 - 1000N
- Grade 3 - 2000N
- Grade 4 - 3000N
- Grade 5 - 5000N

2 (1/2) — Projection of Device

Class 1 - projection up to 150mm
Class 2 - projection up to 100mm

A (A/B) — Type of Operation

EN 1125 Type A - 'push bar' operation
Type B - 'touch bar' operation
EN 179 Type A - 'lever handle' operation
Type B - 'push pad' operation

A (A-C) — Field of Door Application

Category A - Single/Double door - active or inactive leaf
Category B - Single door only
Category C - Double door only - inactive leaf only

Briton Push Bars

"The most important thing you must consider when specifying panic exit hardware is who might be in the building in the event of an emergency."

The following range consists of a vertical panic bolt, rim panic latch and a mortice nightlatch operator. Each product is operated by a horizontal push bar which, when pushed in a downward arc, withdraws either the bolts or the latch, releasing the door for immediate escape in the event of an emergency.







Briton 376 vertical panic bolt

- Two point locking for extra security
- Anti-thrust device, prevents unauthorised retraction of the latch bolt
- Suitable for use on single and double door applications
- Self-handed - will suit both left and right handed doors
- Suitable for doors up to 2500mm high x 1300mm wide (extension rods are required to achieve maximum sizes)
- Optional models available include pullman latches, alarmed and manually dogged (hold open) functions
- Adjustable top and bottom shoots
- Supplied with an easy clean socket

Briton 378 reversible rim panic latch

- Suitable for use on single doors and the first opening leaf of double doors with rebated meeting stiles
- Supplied in left or right hand, but can be reversed on site
- Suitable for doors up to 1300mm wide
- Double door strike available for double rebated door applications
- Available with manual dogging (hold open)
- Can be used with rim cylinder fitted to the outside of the door

Briton 379.N mortice panic nightlatch

- Suitable for use on single and the first opening leaf of double door applications
- Supplied right hand, but can be reversed on site
- Suitable for doors up to 1300mm wide
- Suitable for use with Legge 990 mortice lock, not included

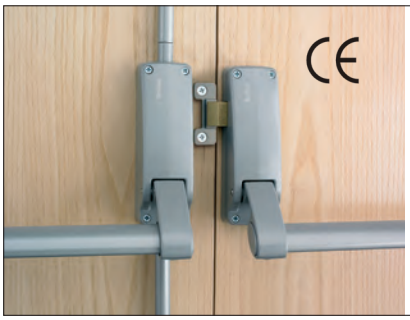

Briton 377
Double rebated door panic set

Comprises a Briton 376 vertical panic bolt, 378 reversible rim panic latch & 378DDS double door strike in one convenient pack.

For information on metal door options please see page 9 for further details.

Briton Push Pads



Briton 372 push pad vertical bolt

- Pad operated vertical bolt
- Anti-thrust device, prevents unauthorised retraction of the latch bolt
- Suitable for use on single and double door applications
- Self-handed to suit left and right handed doors
- Security - Grade 4: 3,000 Newtons
- Suitable for doors up to 2500mm high x 1300mm wide (extension rods are required to achieve maximum sizes)
- Adjustable top and bottom shoots
- Supplied with an easy clean socket



Briton 1438 reversible push pad rim latch

- Pad operated rim latch
- Suitable for use on single doors and the first opening leaf of double rebated door applications
- Supplied in left or right hand, but can be reversed on site
- Suitable for doors up to 1300mm wide
- Security - Grade 4: 3,000 Newtons
- Double door strike available for double rebated door applications
- Can be used with a rim cylinder fitted to the outside of the door

"These products should never be used in areas open to the general public."

The following range consists of a push pad vertical bolt, reversible push pad rim latch and push pad mortice nightlatch. Each product when operated withdraws either the bolts or the latch, releasing the door for immediate escape in the event of an emergency.

Briton Outside Access Devices



Briton 1413E/LE - lever variant

- A combination of market trends and the effect of legislation regarding accessibility for less able users has resulted in an increase in market demand for lever operation.
- The lever is secured to the OAD by a special shear screw designed to fail if the lever is severely abused (e.g. attempted break in, or vandalism) ensuring the mechanism is protected from damage. The shear pin can then be simply replaced to restore normal operation.



Briton 1413E/KE – knob variant

- Ergonomic design providing improved grip in wet conditions.
- Non-handed

Please note: not recommended for high use areas

- Designed to suite with all Briton 376 series of CE compliant exit devices
- Choice of interchangeable knob, or lever (available separately) allowing the most appropriate method of operation to be selected for the buildings users
- Supplied with an oval cylinder as standard. Cylinders supplied separately
- Clearly illustrated instructions and template enabling accurate installation
- Suitable for doors between 40mm and 70mm thick
- Fixings supplied are suitable for timber & metal doorsets
- Powder coated for additional durability
- Lever supplied loose to allow easy on-site handing
- 5 year warranty

Briton Accessories



Extra long top shoot - 376ELTS

- Extra long top shoots are suitable for use on doors in areas that require the push bar to be in a lower position e.g schools. It can also be used on doors up to 3350mm high.
- For use with **Briton 376**, **376.D**, **376.P**, **376.PD**, **376.A**, and **372**.



Flush face keeper plate - 376FFKP

- For use with **376**, **376.D**, **376.A**, and **372**
- For applications where there is a flush head frame a flush face keeper plate can be used to secure the bolt.



Double door strike - 378DDS

- For use on double rebated door applications with a rim panic latch on the first opening leaf and a vertical bolt on the second opening leaf.
- Available in a wide range of finishes (see page 11).

Door co-ordinator

EN 1125 and EN 179 recommend that on a pair of self-closing double rebated fire doors a door co-ordinating device is fitted to ensure the door leaves close in the correct sequence.

Briton 376E Series panic and emergency exit hardware is suitable for application to single doors, and in combinations on non-rebated and rebated double doors.

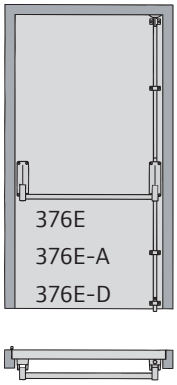

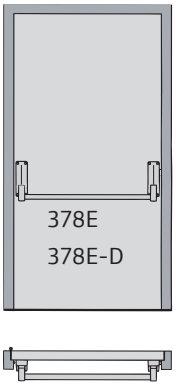

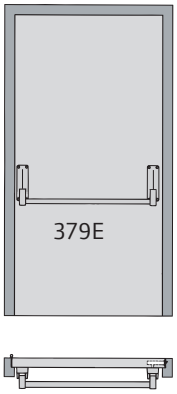

Use with Legge 990 mortice lock.

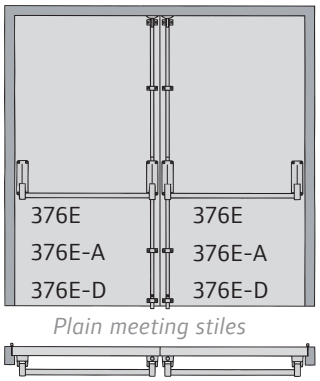

Plain meeting stiles

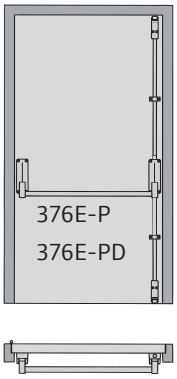

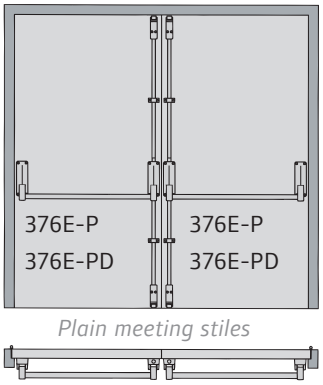

Plain meeting stiles

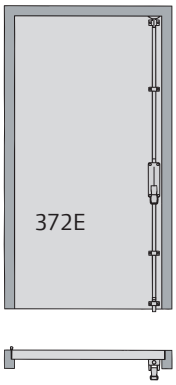



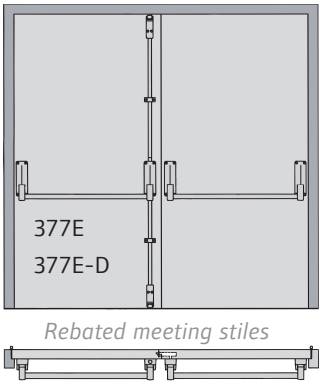

Rebated meeting stiles

Consists of 376/378 and 378DDS

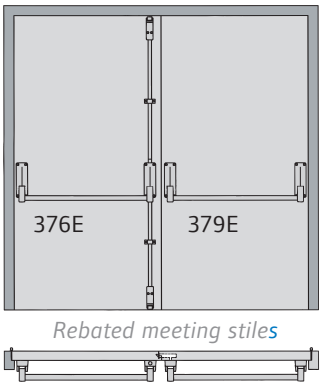

Rebated meeting stiles

Use with Legge 990 mortice lock.

Briton Technical Data

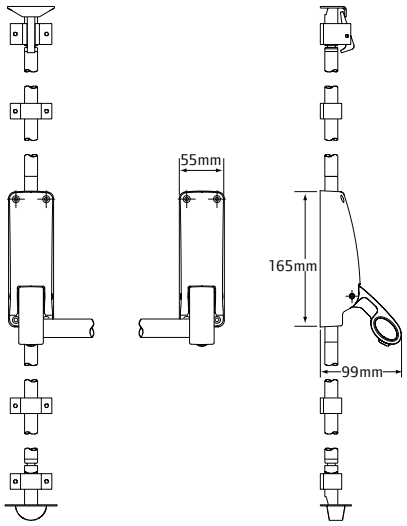

Briton
376, 376.D, 376.P, 376.PD, 376.A

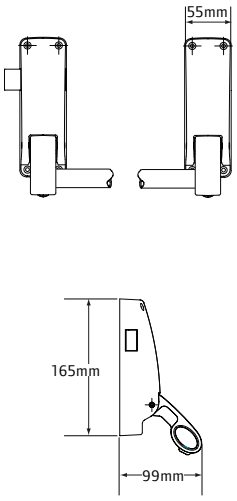

Briton
378E, 378.D

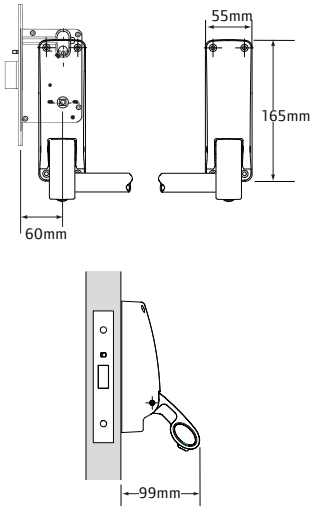

Briton
379.N, 379.NA, 379.ND

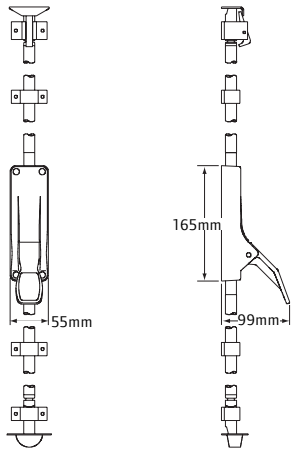

Briton
372, 372.P

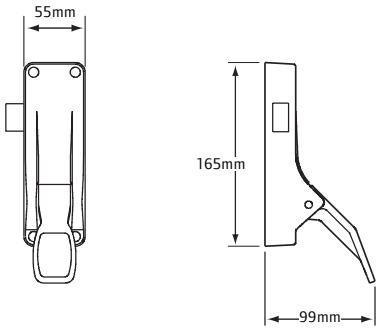

Briton
1438

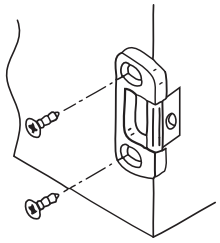

Briton
378DDS

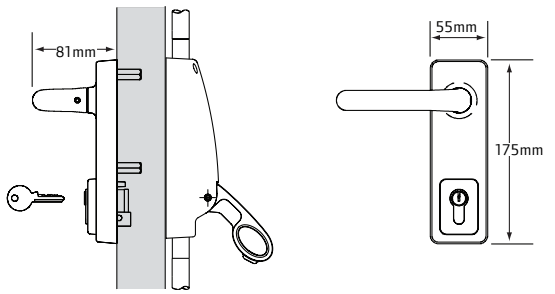

Briton
1413E/LE

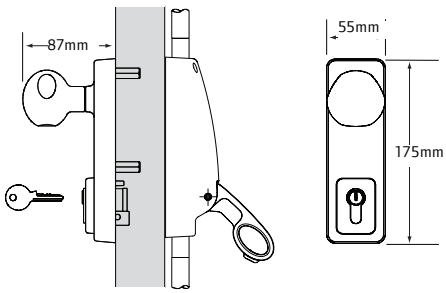

Briton
1413E/KE

Door sizes
All products are suitable for use on doors up to 2500mm high x 1300mm wide. Minimum width of stiles 78mm for 13mm rebates and 90mm for 25mm rebates. For doors with less than 665mm clear opening width please seek advice from Technical Support on 1800 198 094.
For Briton 379.N, 379.NA & 379.ND minimum door thickness is 40mm and minimum width of stile is 88mm.

Construction
Aluminium die cast body and end boxes, with extruded aluminium guides. Solid steel shoot ends with tubular steel shoots and cross bars. Latch bolts are manufactured from extruded brass.

Maintenance
Panic and emergency exit hardware play a vital role in the buildings escape route, and it is important that these devices are inspected and maintained properly to ensure safety at all times.

As recommended in EN 1125 and EN 179 the following routine maintenance checks should be undertaken at intervals of not more than 1 month by the occupier or his approved representative:

- Inspect and operate the emergency exit device to ensure all components are in satisfactory working condition
- Ensure that keepers are free from obstruction

Fire/Smoke
Reference the Fire Precautions Act 1971, always consult the Local Fire Officer for his/her interpretation of the Act before finalising specification. Products within the Briton 376 series have been included in successful fire tests to EN 1634 & BS 476 Part 22. Contact Technical Support on 1800 098 094 for the precise field or application details.

Fixing/Installation
Surface mounted and easily installed as fully described in the fixing instructions. Bars and shoots are supplied with loose end plugs and should be cut to exact size on site. Top and bottom shoots allow 5mm adjustment to ensure accurate fixing. Fixing and maintenance instructions must always be passed on to the user upon completion of installation. Supplied with either self tapping screws or metal thread screws dependent on product selection.

Warranty
To back up the high quality performance warranty and durability of the Briton 376 series, it is supplied with a 5 year warranty on mechanical parts, with free replacement ex-works of any Panic and Emergency Exit hardware proved defective by reason of either faulty manufacture or defect in materials.

CE Certification

Copies of our CE Certificates and other documentation are available to download from website www.security.ingersollrand.co.uk

Special Applications
For special applications outside those mentioned within this brochure please contact Customer Services team on 1800 098 094 who will be able to advise and assist with product selection for non-standard installations.

Technical Support

If you have any queries regarding Briton exit devices and product selection please call our Customer Services team who will be pleased to offer any assistance on any aspect of our products including queries on:

- Product selection
- Advice on installation
- Trouble shooting
- Ancillary products and spare parts.

For further details call the Customer Services team on 1800 098 094.

Supply & Quotations
The Briton 376 series is available through a nationwide network of architectural hardware and builders' merchants.

Ingersoll Rand
Security Technologies

New Zealand

National Customer Service Phone	**0800 477 869**
National Customer Service Fax	**0800 477 868**
Customer Service Email	**nzinfo@irco.com**
Website	**www.ingersollrand.co.nz**

Auckland
PO Box 19 347, Avondale, 1746
437 Rosebank Road, Avondale, Auckland, 1026

Phone	**(09) 829 0550**
Fax	**(09) 829 0552**
Customer Service Phone	**(09) 829 0553**
Customer Service Fax	**(09) 829 0557**

Christchurch
PO Box 10 027, Phillipstown, 8145
Unit 7/211 Ferry Road, Christchurch, 8145

Phone	**0800 477 869**
Fax	**(03) 366 3152**

Wellington
PO Box 13440, Johnsonville, 6440
Unit 2B, 16 Centennial Drive, Ngauranga, Wellington, 6035

Phone	**0800 477 869**
Fax	**(04) 478 7210**

Australia

National Customer Service Phone	**1 800 098 094**
National Customer Service Fax	**1 800 098 095**
Customer Service Email	**auinfo@irco.com**
Website	**www.ingersollrand.com.au**

Melbourne
PO Box 346, Sunshine
16-20 Third Avenue, Sunshine
Victoria 3020

Sydney
PO Box 404, North Ryde
Unit 2, 47 Epping Road, North Ryde
New South Wales 2113

Brisbane
PO Box 2178, Logan City, 4114
64 Parramatta Road, Underwood
Queensland 4119

Perth
PO Box 1238, Osborne Park, 6916
Unit 5, 25 Forward Street, East Victoria Park
Western Australia 6101

October 2012