6205-2RSH

SKF Explorer

Dimensions

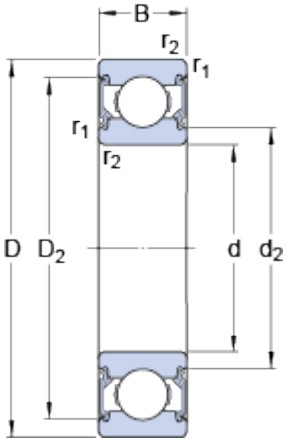

d		25	mm
D		52	mm
B		15	mm
d_2		31.15	mm
D_2		46.21	mm
$r_{1,2}$	min.	1	mm

Abutment dimensions

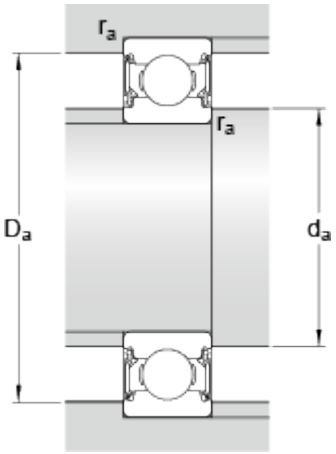

d_a	min.	30.6	mm
d_a	max.	31.5	mm
D_a	max.	46.4	mm
r_a	max.	1	mm

Calculation data

Basic dynamic load rating	C	14.8	kN
Basic static load rating	C_0	7.8	kN
Fatigue load limit	P_u	0.335	kN
Limiting speed		8500	r/min
Calculation factor	k_r	0.025	
Calculation factor	f_0	14	

Mass

Mass bearing		0.132	kg