Brand of NTN corporation

Technical data

BBE16UU-RL

Standard ball bushings closed



VISUAL (S)

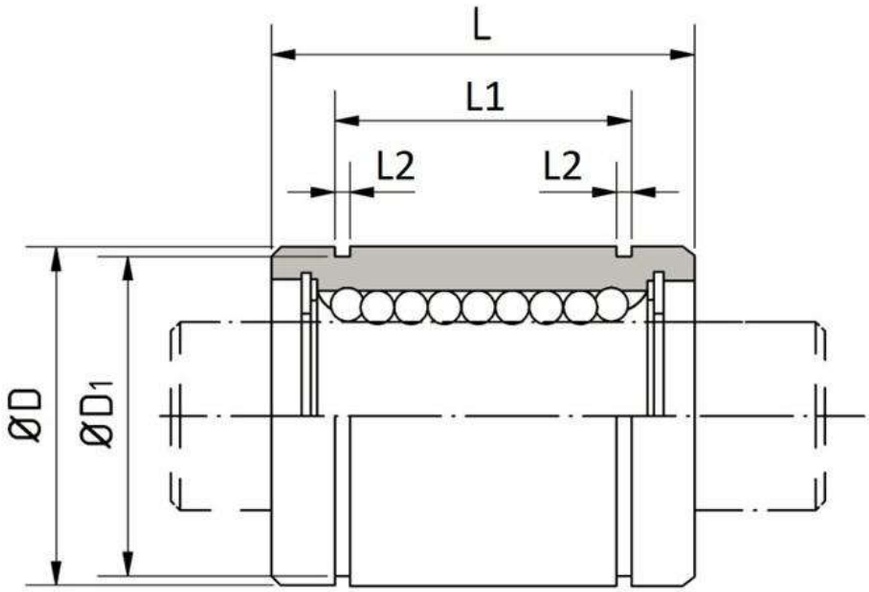

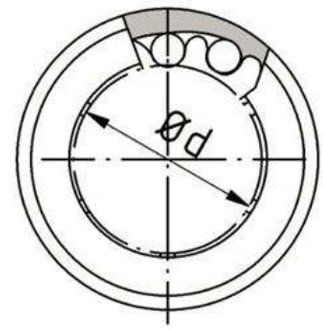

PRODUCT DEFINITION

Brand	SNR
Design type	BBE
Ball bushings category	Standard ball bushings, closed
Standard	ISO dimension
Number of seals	2
Material outer cylinder or steel segments	100Cr6
Material Cage	PA
Initial greasing	Non/No
Re-lubrication and fixing hole	Oui/Yes

BBE16UU-RL
Standard ball bushings closed

PRODUCT DEFINITION	
Re-lubricable	Oui/Yes
d - Internal diameter	16 mm
d - Internal diameter tolerance	0,009/-0,001
D - External diameter	26 mm
D - External diameter tolerance	0/-0,009
L - Length	36 mm
L - Length tolerance	0/-0,2
L1	24,9 mm
L1 tolerance	0/-0,2
D1 - Diameter	24,9 mm
L2	1,3 mm
Number of ball rows	4
Mass	0,06 kg

PRODUCT PERFORMANCE	
Cmin	0,432 kN
Cmax	0,611 kN
C0min	0,892 kN
C0max	1,261 kN
Tmin - Min operating temperature	-20 °C
Tmax - Max operating temperature	80 °C

ESHOPDONOTDISPLAY	
Reference	BBE16UU-RL
Image	BBE-RL_1.JPG, BBE-RL_3.JPG

ESHOPDONOTDISPLAY	
Send to Eshop	Yes
Send to Paper Catalog	Yes
Tracepart	Oui/Yes