# SM2 MODULE OF ANALOG INPUTS

LUMEL EVERYTHING COUNTS

**FEATURES:**

MOD BUS

eCon software

Linear charact.

**INPUTS:**

0...20 mA

4...20 mA

0...10 V

Ω

**OUTPUTS:**

RS 485

2x

**GALVANIC ISOLATION:**

RS 232

Supply

RS 485



CE

- Conversion of standard signals and temperature into RS-485 / MODBUS in 4 channels
- Programmable measurement characteristic
- Fixing on a TS35 rail
- Mathematical functions realized between channels and on channels
- 2 programmable OC outputs
- Full galvanic separation between inputs.

## EXAMPLE OF APPLICATION

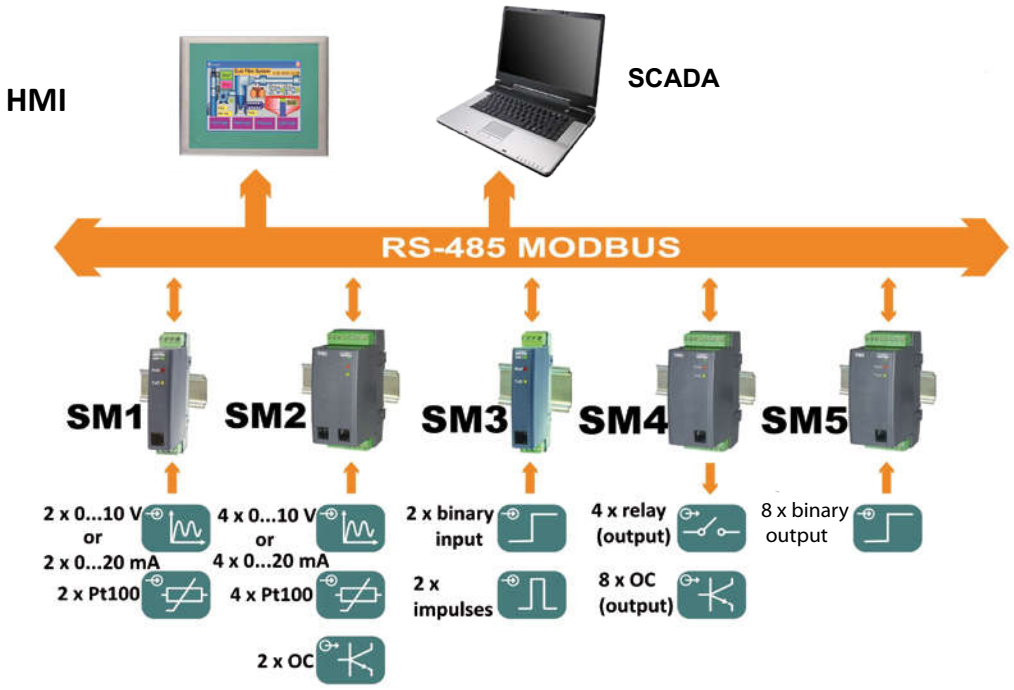


## EXTERNAL FEATURES

| | | |
|---|---|---|
| Overall dimensions | 45 x 120 x 100 mm | |
| Weight | < 0.3 kg | |
| Protection grade | IP40 | from terminal side: IP20 |

## DIGITAL INTERFACE

| Interface type | Transmission protocol | Modes | Baud rate |
|---|---|---|---|
| RS-485 | Modbus RTU | 8N2,8E1,8O1,8N1 | 2400; 4800; 9600; 19.2 k; 38.4 k; 57.6 k; 115 k bit/s |
| | Modbus ASCII | 8N1, 7E1, 7O1 | |

## INPUTS

| Input type | Range | Error |
|---|---|---|
| Temperature | -200...850 °C | 0.1% |
| Current | 0/4...20 mA | 0.1% |
| Voltage | 0...10 V | 0.1% |
| Resistance | 0...400 Ω | 0.1% |

## OUTPUTS

| Output type | Properties | Remarks |
|---|---|---|
| Digital interface | RS-485 | Modbus ASCII/RTU |


**Export department:**
+48 68 45 75 130
**e-mail:** export@lumel.com.pl

**LUMEL S.A.**
ul. Słubicka 4
65-127 Zielona Góra
POLAND
**WWW.LUMEL.COM.PL**

# SM2 MODULE OF ANALOG INPUTS

## RATED OPERATING CONDITIONS

| | | |
|---|---|---|
| Supply voltage | 85...253 V a.c./d.c. (40...400 Hz) or d.c.<br>20...50 V a.c./d.c. (40...400 Hz) or d.c. | Input power: ≤ 4 VA |
| Temperature | ambient: -10...23...55°C | |
| Relative humidity | < 95% | |
| Operating position | on a TS35 rail | |
| External magnetic field | < 400 A/m | |

## SAFETY AND COMPABILITY REQUIREMENTS

| | | |
|---|---|---|
| Electromagnetic compability | Noise immunity | acc. to EN 61000-6-2 |
| | Noise emissions | acc. to EN 61000-6-4 |
| Isolation between circuits | | acc. to EN 61010-1 |
| Pollution level | 2 | |
| Installation category | III | |
| Maximum phase-to-earth operating voltage | Supply: 300 V, input 50 V,<br>Output: 50 V | |
| Altitude a.s.l. | 2000 m | |

## CONNECTION DIAGRAMS

**Connection way of external signals**

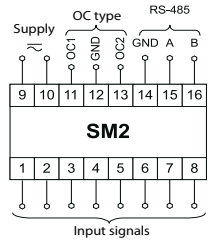


**Connection way of the RS-485 interface**

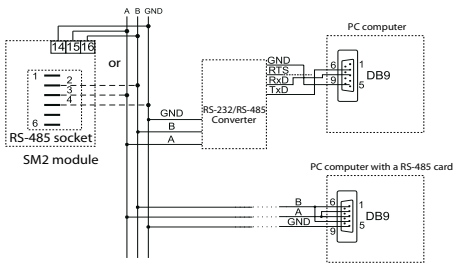


**Connection way of input signals**

| Connection way | Measured signal | |
|---|---|---|
| | 4 voltage inputs | 4 current inputs |
| | 4 x 0...10 V | 4 x 0/4...20 mA |
| | 2 voltage inputs<br>+ 2 current inputs | 4 RTD inputs in a 2-wire system<br>or resistance measurement |
| | 2 x 0...10 V 2 x 0/4...20 mA | |

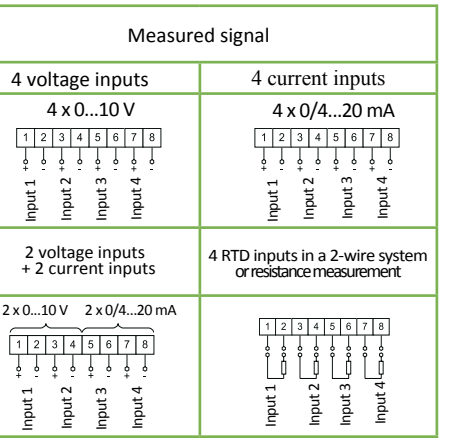


**Connection way of the RS-232 interface**

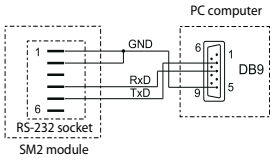


## ORDERING

| **Module of analog inputs - SM2** | | **XX** | **X** | **X** |
|---|---|---|---|---|
| **Input signal :** | | | | |
| 4 voltage inputs | 0...10 V | 00 | | |
| 4 current inputs | 0/4...20 mA | 01 | | |
| 2 voltage inputs + 2 current inputs | 0...10 V+0/4...20 mA | 02 | | |
| 4 resistance inputs 0...400 Ω or Pt100 | | 03 | | |
| **Supply:** | | | | |
| 85...253 V a.c./d.c. | | | 1 | |
| 20...50 V a.c./d.c. | | | 2 | |
| **Acceptance tests:** | | | | |
| without additional quality inspection requirements | | | | 8 |
| with an extra quality inspection certificate | | | | 7 |
| other quality requirements * | | | | X |

* after agreeing with the manufacturer

**Ordering example:**

The code **SM2 - 01 1 8** means:
**SM2** - module of SM2 type

**01** - 4 current inputs: 0/4...20 mA

**1** - supply: 85...253 V a.c./d.c.

**8** - without additional quality inspection requirements

For more information about LUMEL's products please visit our website: www.lumel.com.pl


**Export department:**
+48 68 45 75 130
**e-mail:** export@lumel.com.pl

**LUMEL S.A.**
ul. Słubicka 4
65-127 Zielona Góra
POLAND
**WWW.LUMEL.COM.PL**