E20454

REFLECTOR TS-96x96

Accessories

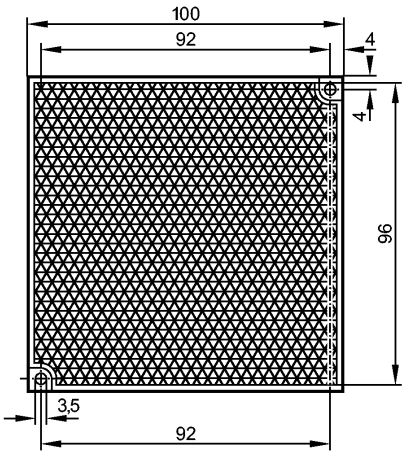

Made in Germany

Product characteristics		
Prismatic reflector		
96 x 96 mm		
Environment		
Ambient temperature	[°C]	-10...60
Mechanical data		
Design		rectangular; For red light and infrared light retro-reflective sensors
Thickness [mm]		9.5
Housing materials		plastics
Weight	[kg]	0.067
Remarks		
Pack quantity	[piece]	1