# 2205 E-2RS1TN9

## Dimensions

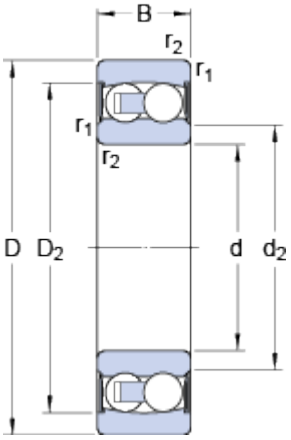


| | | | |
|---|---|---|---|
| d | | 25 | mm |
| D | | 52 | mm |
| B | | 18 | mm |
| $d_2$ | ≈ | 31 | mm |
| $D_2$ | ≈ | 46.21 | mm |
| $r_{1,2}$ | min. | 1 | mm |

## Abutment dimensions

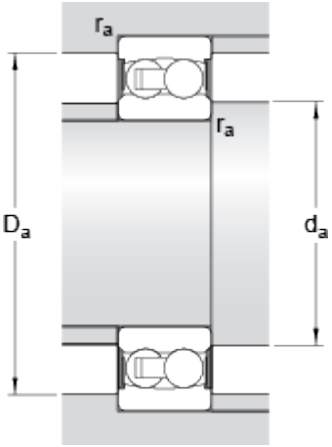


| | | | |
|---|---|---|---|
| $d_a$ | min. | 30.6 | mm |
| $d_a$ | max. | 31 | mm |
| $D_a$ | max. | 46.4 | mm |
| $r_a$ | max. | 1 | mm |

## Calculation data

| | | | |
|---|---|---|---|
| Basic dynamic load rating | C | 14.3 | kN |
| Basic static load rating | $C_0$ | 4 | kN |
| Fatigue load limit | $P_u$ | 0.21 | kN |
| Limiting speed | | 9000 | r/min |
| Calculation factor | $k_r$ | 0.045 | |
| Calculation factor | e | 0.28 | |
| Calculation factor | $Y_0$ | 2.5 | |
| Calculation factor | $Y_1$ | 2.2 | |
| Calculation factor | $Y_2$ | 3.5 | |

## Mass

| | | |
|---|---|---|
| Mass bearing | 0.16 | kg |