87045 LIMOGES Cedex
Telephone : 05 55 06 87 87 – Fax: 05 55 06 88 88

Harmonic analysis module for 4 120 53

Cat. N°: 4 120 61



Contents **Pages**

1. Description - Use.....1
2. Range.....1
3. Overall dimensions.....1
4. Preparation - Connection.....1
5. General characteristics.....2
6. Compliance and approvals.....3

1. DESCRIPTION - USE

Harmonic analysis module.
Allows the analysis of the harmonic spectrum for voltages and currents.
Adding the RS485 module (cat. nos. 4 120 55 or 4 120 56), data of harmonic analysis are also available in communication.

2. RANGE

. Cat. n° 4 120 61: Harmonic analysis module; associable only to multifunction measuring device 4 120 53.
. It is possible to connect only one module 4 120 61.

Auxiliary supply:
. Supplied by the multifunction measuring device 4 120 53

3. OVERALL DIMENSIONS

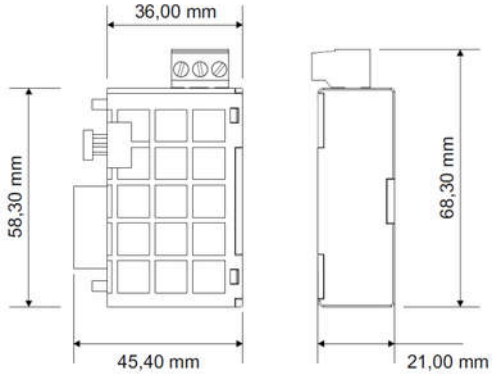

4. FIXING - CONNECTION

Fixing:

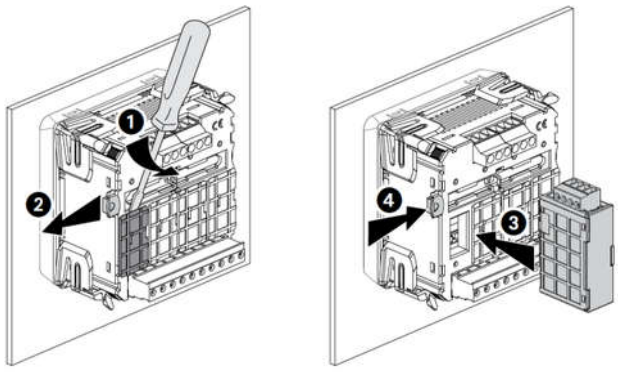

Note: modules must be connected with the device 4 120 53 not supplied.

Associability table:

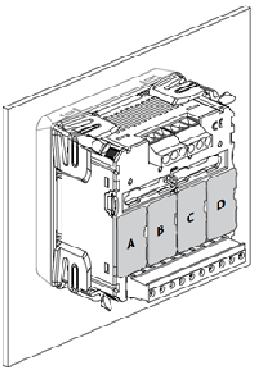

	A	B	C	D	
4 120 55	✓	×	×	×	max. 1
4 120 56	✓	×	×	×	max. 1
4 120 57	×	×	✓	✓	max. 2
4 120 58	×	×	×	✓	max. 1
4 120 59	✓	✓	✓	✓	max. 2
4 120 60	×	×	✓	✓	max. 2
4 120 61	×	✓	×	×	max. 1

Operating position:
. Vertical Horizontal Upside down On the side

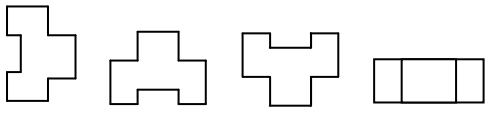

4. FIXING - CONNECTION *(continued)*

Screw terminals:
. Terminal depth: 8 mm.
. Stripping length: 8 mm

Screw head:
. Screw slotted.

Recommended tightening torque:
. 0,6 Nm.

Tools required:
. For terminals: flat screwdriver 3,5 mm
. For fixing the modules to the measuring device: flat screwdriver max. 5 mm.

Connectable section:
. Copper cables.

	Without ferrule	With ferrule
Rigid cable	**0,05 to 4,5 mm²**	-
Flexible cable	**0,05 to 2,5 mm²**	**0,05 to 2,5 mm²**

Wiring diagrams:
. Terminals identifications

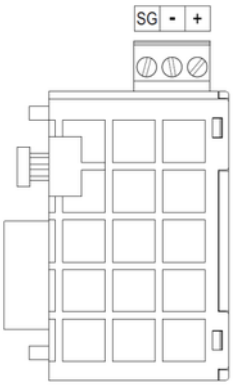

Wiring diagrams *(continued)*
. To transmit in communication data related to harmonic analysis, terminals of the 4 120 61 module must be connected to the RS485 bus with the same rules applied to the communication modules (cat. nos. 4 120 55 or 4 120 56)

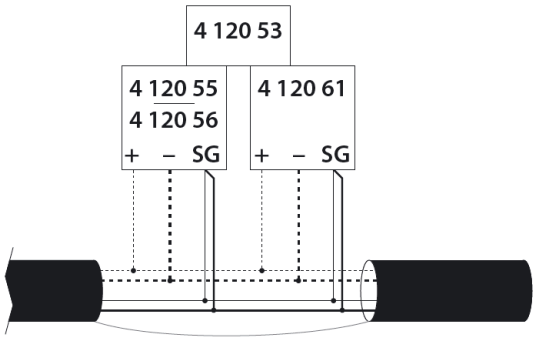

. **Note**: connection is not required if you don't want to refer measurements performed by the module 4 120 61 to a supervision system.

5. GENERAL CHARACTERISTICS

Terminals marking:
. By permanent ink pad printing.

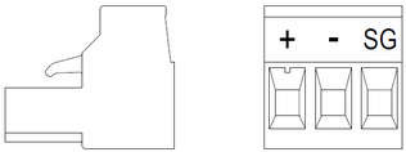

Harmonic spectrum analysis:
With the 4 120 61 module only installed, the 4 120 53 displays:
- odd harmonics of phase voltages (V_1, V_2, V_3) or chained voltages (V_{12}, V_{23}, V_{31}), from 3rd to 9th expressed as a percentage of the fundamental.
- odd harmonics of phase currents (I_1, I_2, I_3), from 3rd to 9th expressed as a percentage of the fundamental.
- crest factor of voltages and currents.
- phase angle between voltages and the between currents.

. Installing the RS485 module (cat. no 4 120 55 or 4 120 56), following data are available in communication:
- harmonics (odd and even) of phase voltages (V_1, V_2, V_3) or chained voltages (V_{12}, V_{23}, V_{31}), from 2nd to 50th, expressed as a percentage of the fundamental.
- harmonics (odd and even) of phase currents (I_1, I_2, I_3) , from 2nd to 50th, expressed as a percentage of the fundamental.
- crest factor of voltages and currents.
- phase angle between voltages and the between currents.

Plastic material:
. Self-extinguishing polycarbonate.

Ambient operating temperature:
. Min. = - 5 °C Max. = + 55 °C.

Ambient storage temperature:
. Min. = - 25 °C Max. = + 70 °C.

Impulse withstand voltage:
. Measuring inputs / All circuits
alternate current 50 Hz / 1 min.: 2 kV

Note: values referred to combination measuring device + add-on module.

Average weight per device:
. 0,030 kg.

Volume when packed:
. 0,30 dm^3

Consumption:
. Module 4 120 61: ≤ 1 VA
. Measuring device 4 120 53 + 1 Module 4 120 61: ≤ 5 VA

6. COMPLIANCE AND APPROVALS

Compliance to standards:

. Compliance with Directive on electromagnetic compatibility (EMC) n° 2004/108/EC
. Compliance with low voltage directive no. 73/23/CEE dated 19 February 1973, modified by directive no. 93/68/CEE dated 22 July 1993, modified by directive n° 2006/95/CE.
. IEC/EN 60751