EVC856

Connecting cable with socket

ADOAH040MSS0003K04

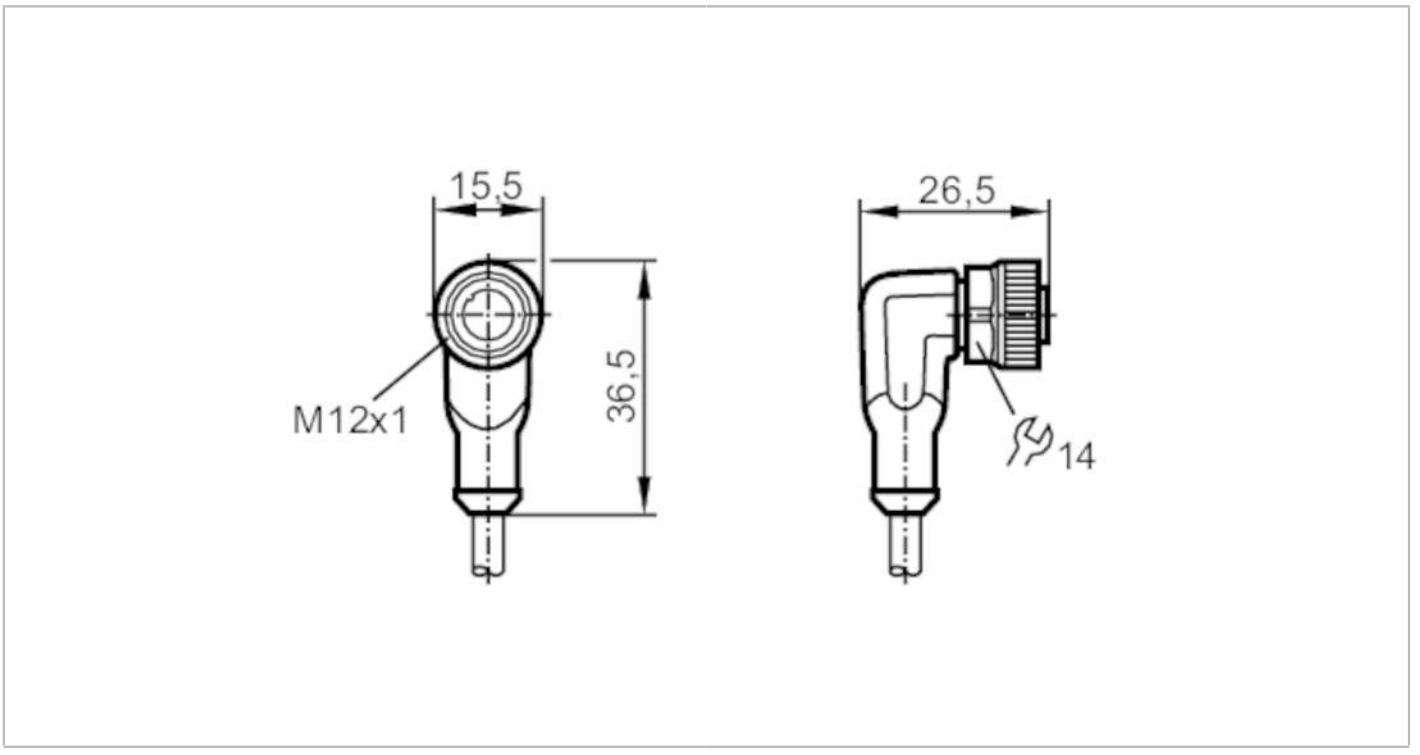

Application			
Special feature			Free from silicone; Halogen-free; Gold-plated contacts; Screened cable; Drag chain suitability
Free from silicone			yes
Electrical data			
Operating voltage	[V]		< 50 AC / < 60 DC
Protection class			III
Max. current load total	[A]		4
Operating conditions			
Ambient temperature	[°C]		-25...90
Ambient temperature (moving)	[°C]		-25...90
Protection			IP 65; IP 67
Mechanical data			
Weight	[g]		138.5
Dimensions	[mm]		26.5 x 15.5 x 36.5
Materials			housing: TPU orange; Sealing: FKM
Material nut			brass, nickel-plated
Drag chain suitability			yes
Drag chain suitability		bending radius for flexible use	min. 10 x cable diameter
		travel speed	max. 3.3 m/s for a horizontal travel length of 5 m and max. acceleration of 5 m/s²
		bending cycles	≥ 2 Mio.
		torsional strain	± 180 °/m

EVC856

Connecting cable with socket

ADOAH040MSS0003K04

Remarks	
Pack quantity	1 pcs.

Electrical connection

Cable: 3 m, PUR, Halogen-free, black, Ø 4.9 mm, shielded; 4 x 0.34 mm² (42 x Ø 0.1 mm)

Electrical connection - socket

Connector: 1 x M12, angled; coding: A; Locking: brass, nickel-plated; Contacts: gold-plated; Tightening torque: 0.6...1.5 Nm; Shielded connection cable: screen connected

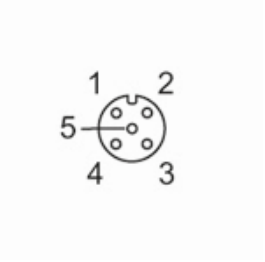

Connection

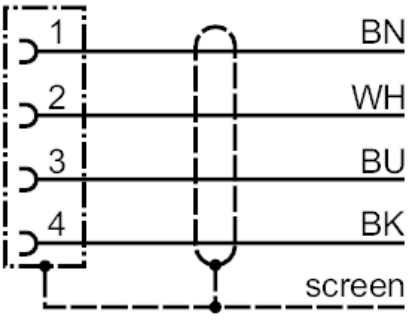

	Core colours :
BK =	black
BN =	brown
BU =	blue
WH =	white

EVC856

Connecting cable with socket

ADOAH040MSS0003K04

Diagrams and graphs

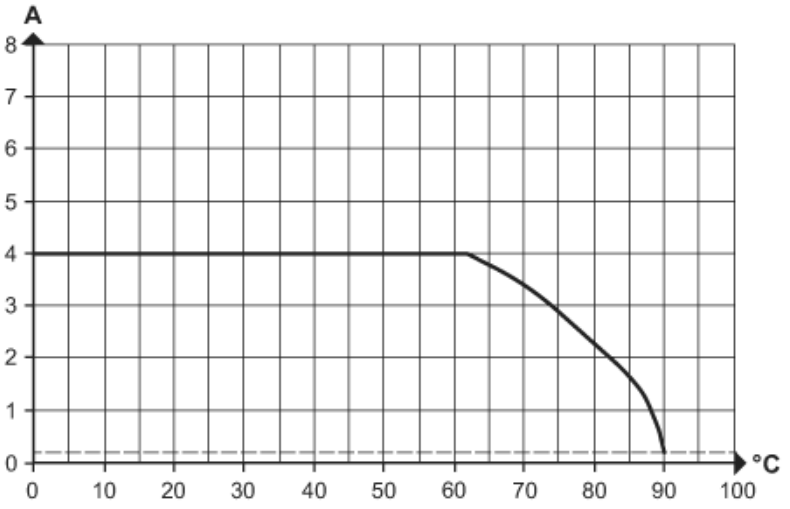

Derating Imax * 0.8 DIN EN 60512-5-2

X Ambient temperature [°C]

Y Current [A]

Shielding characteristics

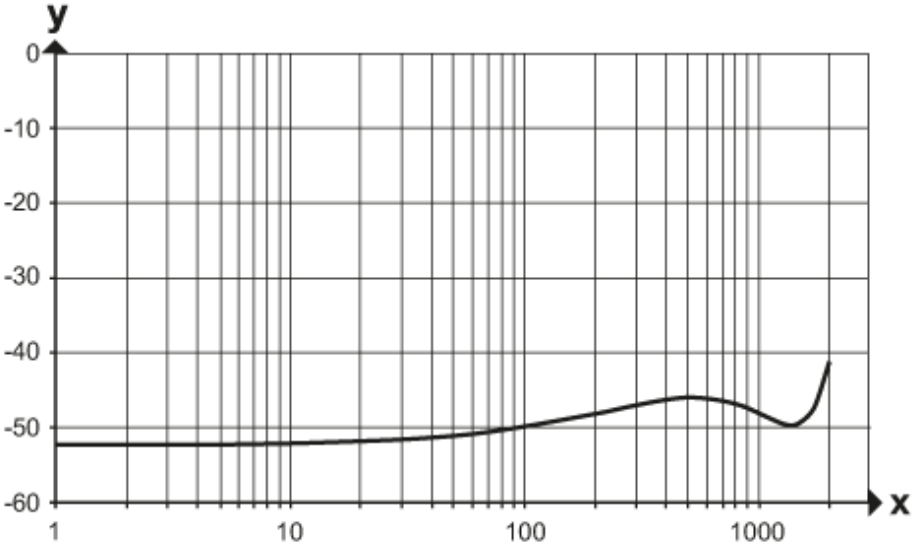

x frequency (MHz)

y Shielding characteristics (dB)

according to DIN EN 60512-23-3